valentin DRUCKSYSTEME

SPE

Interface Description

Quality . Tradition . Innovation

Information on the scope of delivery, appearance, performance, dimensions and weight reflect our knowledge at the time of printing.

We reserve the rights to make modifications.

Due to the constant further development of our devices discrepancies between manual and device can occur.
Please check www.carl-valentin.de for the latest update.

Trademarks

All named brands or trademarks are registered brands or registered trademarks of their respective owners and may not be separately labelled. It must not be concluded from the missing labelling that it is not a registered brand or a registered trademark.

Carl Valentin label printers comply with the following safety guidelines:

CE EG Low-Voltage Directive (73/23/EEC)
EG Electromagnetic Compatibility Directive (89/336/EEC)

Carl Valentin GmbH

Postfach 3744
78026 Villingen-Schwenningen
Neckarstraße 78 – 86 u. 94
78056 Villingen-Schwenningen

Phone +49 7720 9712-0
Fax +49 7720 9712-9901

E-Mail info@carl-valentin.de
Internet www.carl-valentin.de

SERIAL DATA TRANSMISSION 1
XON / XOFF - Protocol 1
Connector assignment (9-pin DSUB socket) 1
Connecion RS 232 2
Connector assignment RS485 and RS422 3
PARALLEL DATA TRANSMISSION 4
Connection 5
ROTATION OF TEXT, CODE AND GRAPHIC 6
DATUMPOINT 6
DATA FORMAT 7
Explanations 8
Definition of field attributes/field properties (optional) 9
Field Names 10
Field selection by free definable field number 14
MASK SET 15
Text 15
Standard code 17
2D bar codes 19
Rectangle 27
Line 27
Internal graphic 28
TEXT SET 29
GRAPHIC 31
General graphic format 31
Graphic in PCX format 32
VARIABLES 34
Set structure 34
Link field 34
Counter 35
Extended counter 36
Date / Time 37
Currency variable 41
Shift variable 42
User guiding 43
Memory card data 44
GS1-128 Parser 44
EPC calculation (Electronic Product Code) 45
Check digit 46
Substring 47

PARAMETER SETS 48
Label parameter 48
Label photocell 53
Dispenser photocell 54
Printer settings 55
Interface 60
Offset values 62
Service functions 64
Date & Time 68
Password 71
Print 73
Emulation 76
PARAMETER SETS FOR OPTIONS 77
Network 77
Memory Card 81
Cutter 84
Dispenser 86
Scanner 91
AUTOSTATUS 95
CHARACTER SETS 97
International ANSI character font 99
Codepage 437 100
Codepage 850 101
Codepage 852 102
Codepage 857 103
GEM German 104
GEM English 105
GEM French 106
GEM Swedish 107
GEM Danish 108
FONT EXAMPLES 109
Bitmap fonts (not proportional) 109
Bitmap fonts (proportional) 109
Vector fonts 109
INDEX 111

SERIAL DATA TRANSMISSION

XON / XOFF - Protocol

The XON / XOFF protocol is used in "memory"-mode. The XON-code (HEX 11) indicates that the printer is ready to receive data. When XOFF-code (HEX 13) is shown the transmission of data has to be interrupted. To avoid possible data loss some information will be stored into the data-memory. When receiving, that the memory is empty the XON-code (HEX 11) will be shown again.

Connector assignment (9-pin DSUB socket)

Pin	Signal	Beschreibung
2	R x D	Receiving data line
3	T x D	Transmitting data line
4	DTR	HW Handshake
5	GND	GND Signal

Connecion RS 232

Terminal assignment (cable)

XON / XOFF - report: e.g. connection to an IBM-compatible computer

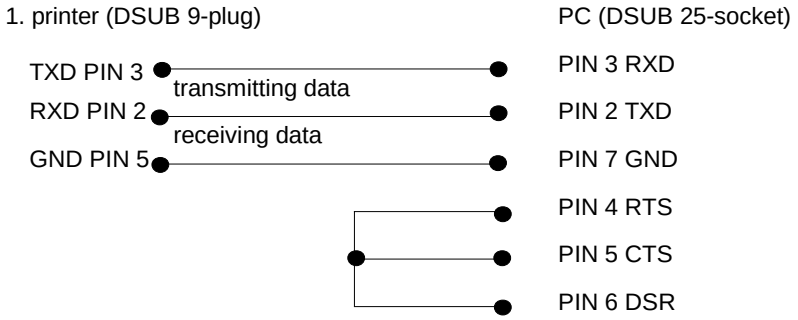

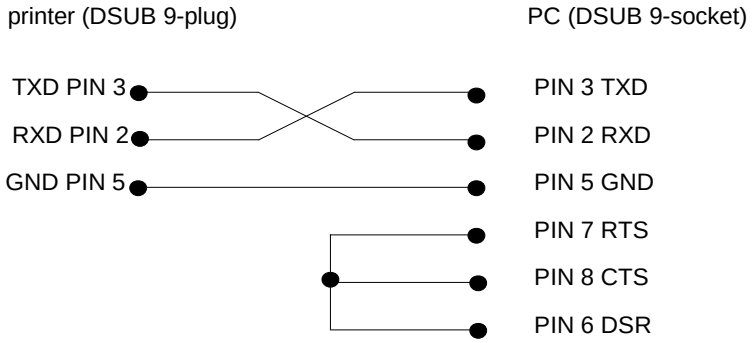

Hardware handshake:

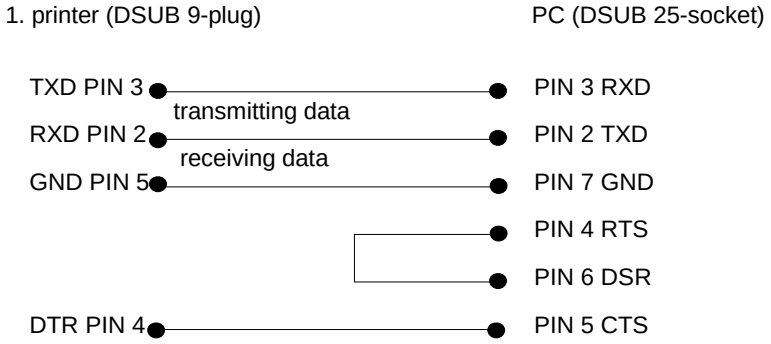

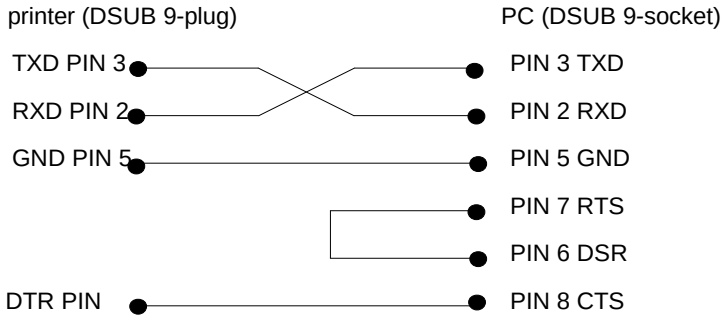

Connector assignment RS485 and RS422

9-pin DSUB socket)

PIN at DSUB socket	Function RS422 (full duplex)	Function RS485 (semi duplex)
1	GND	GND
2	n/c	n/c
3	n/c	n/c
4	RxD−	n/c
5	RxD+	n/c
6	n/c	TxD (RxD)−
7	n/c	TxD (RxD)+
8	TxD−	n/c
9	TxD+	n/c

PARALLEL DATA TRANSMISSION

Interface:	parallel Interface	
	synchronising with STROBE - signal	
	handshake with BUSY - signal	
	all signals are TTL - compatible	
Connection:	AMPHENOL - plug 57-30360	
	PIN 1	In regular condition, this signal is in "HIGH" position. With decreasing amplitude the data acceptation is completed from DATA 1 . . . . . DATA 8.
	PIN 2 . . . 9	DATA 1 . . . . . DATA 8 parallel data information
	PIN 10	$\overline{\text{ACKNLG}}$
	PIN 11	In regular condition this signal is "LOW". With decreasing amplitude of STROBE- signals, BUSY will change onto "HIGH" - level. This level will stay as long as the printer is busy with the already received data byte.

Connection

AMP 36 (Centronic's socket)

Signal Pin-No.	Signal name	Direction	Function
1	$\overline{\text{STROBE}}$	(input)	The $\overline{\text{STROBE}}$ signal indicates that data can be received. The impulse width to the receiving line has to be 0,5 µs at least.
2	DATA 0	(input)	The signals are data bits sent to the printer. A HIGH level corresponds to logical 1 and a LOW level to logical 0.
3	DATA 1	(input)	
4	DATA 2	(input)	
5	DATA 3	(input)	
6	DATA 4	(input)	
7	DATA 5	(input)	
8	DATA 6	(input)	
9	DATA 7	(input)	
10	$\overline{\text{ACKNLG}}$	(output)	An impulse of approx. 12 µs confirms data input for a LOW level and signalises the further listening watch of the printer.
11	BUSY	(output)	A HIGH level indicates that the printer cannot receive any data. On the following conditions the signal HIGH is possible: 1) for data input (impulse for each sign) 2) during a printing process 3) in Offline status 4) for printer failures
12	PE	(output)	A HIGH level indicates that paper is used up.
13	SELECT	(output)	High Online
14	AUTOFEED		
15	GND		
16	GND		Signal ground.
17	CHASSISGND		Mass, not connected with signal ground.
18	+ 5V		Approx. 4,8 V (max. 100mA)
19-30	GND		Return conductor for twisted pair conductors.
31	not used		-
32	$\overline{\text{FAULT}}$	(output)	Signal goes to LOW, in case 1) the paper is used up 2) the printer is Offline or 3) an error occurs.
33	not used		
34	not used		
35	not used		
36	not used		

ROTATION OF TEXT, CODE AND GRAPHIC

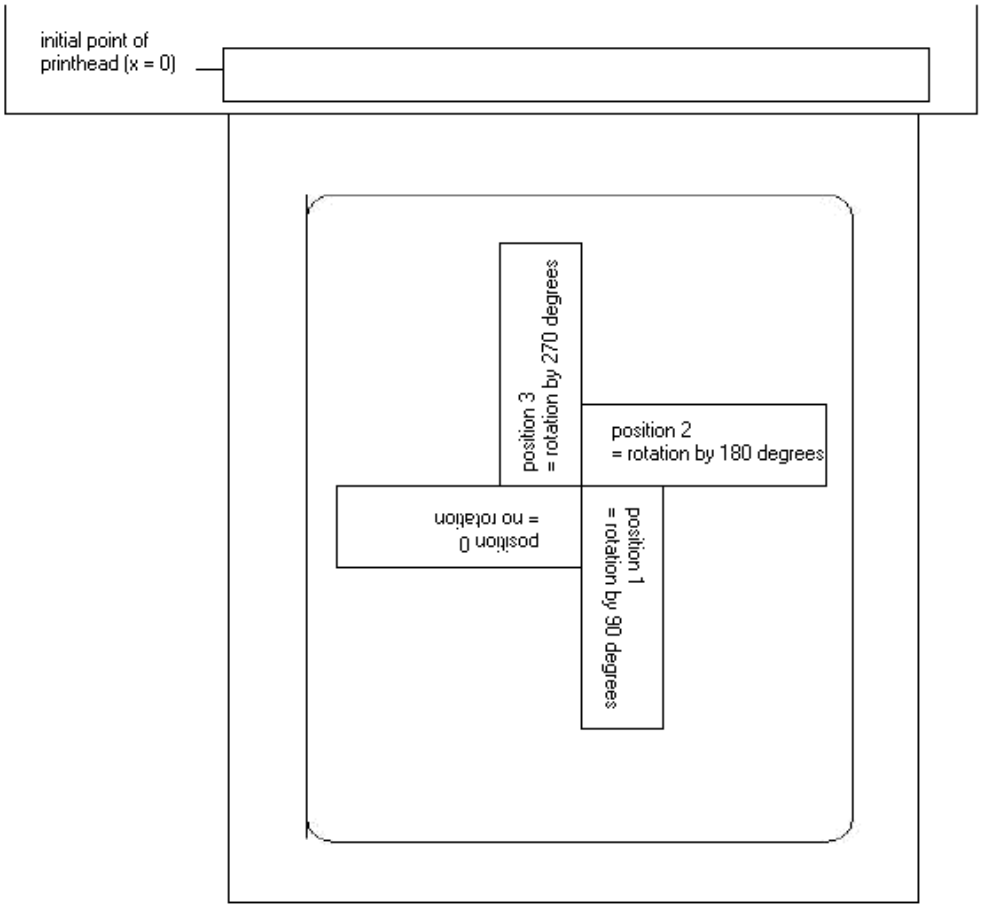

DATUMPOINT

The so-called datumpoint is the relation point for indication of position. In the meantime the datumpoint is also the point at which the selected object is rotated.
To determie the datumpoint in the mask sets, the possible datumpoints are numbered from left top (1) to right bottom (9). The default datumpoint is left bottom (7). This datumpoint is also used even if no indication is found in the mask set.

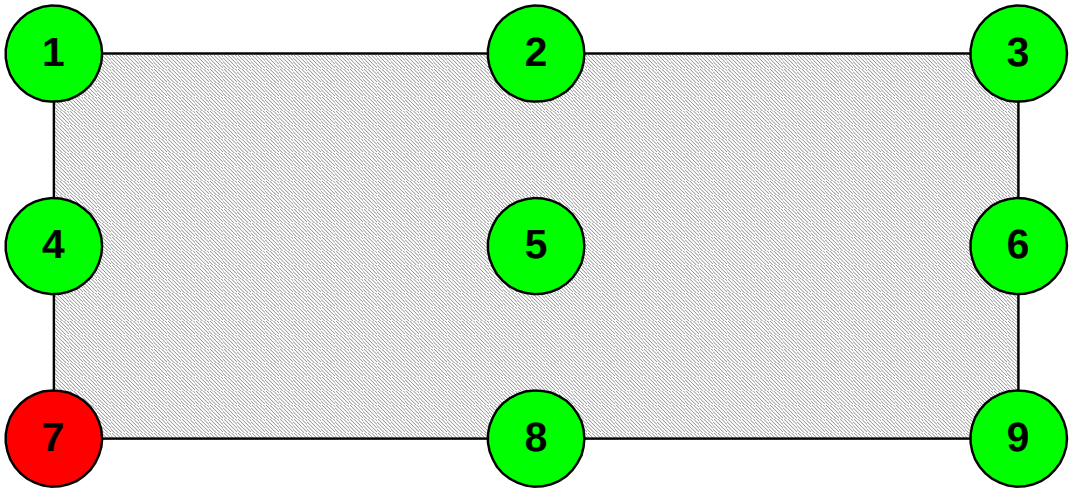

DATA FORMAT

The format of data consists of 4 parts, the mask part, the text, the code (if necessary) and the command part.

For a n-line label the following has to be transmitted:

n	mask sets
n	text sets
n	graphic sets (if necessary)
1	command set

The command set always has to be transmitted at the end!
To each text on a label belongs one MASK SET and one TEXT SET with the same field number.
To each code on a label belongs one MASK SET, one TEXT SET and one CODE SET with the same field number.
To each box or line on a label belongs only one MASK SET.
To each graphic on a label belong several GRAPHIC SETS according to its size res. height, e.g. a graphic with a height of 10 mm needs 80 graphic sets.

Examples:

label with 3 lines text:	3 mask sets 3 text sets 1 command set
label with 3 lines text and 1 code:	4 mask sets 4 text sets 1 code set 1 command set
label with 2 lines text, 1 box and 3 lines:	6 mask sets 2 text sets 1 command set

For all data sets the following is valid:

Each set starts with: **SOH = start of header** → HEX format 01
and ends with: **ETB = end of data transmission block** → HEX format 17

Alternatively, the start character SOH can be set to $5E_{Hex}$, the end character ETB to $5F_{Hex}$. This is necessary if the connected system (e.g. UNIX) cannot transfer control signs.

All other data sets → ASCII format, but they will be transmitted as hexadecimal characters.

Example: A = identification of mask set - transmission: 41_{HEX}
n = field number '01' - transmission: 30_{HEX}, 31_{HEX}

Explanations

x coordinate: distance from right label rim in mm
is measured from the right label rim up to the lower left point of the corresponding line

y coordinate: distance from upper label rim in mm
is measured from the beginning of the label down to the lower left point of the corresponding line

Bitmap fonts not proportional: bitmap fonts - not proportional (Matrix – mm)

01 = FONT 01	0,8 x 1,1 mm	- 127 characters
02 = FONT 02	1,2 x 1,7 mm	- 255 characters
03 = FONT 03	1,8 x 2,6 mm	- 255 characters
04 = FONT 04	4,0 x 5,6 mm	- 127 characters
05 = FONT 05	1,8 x 3,2 mm - descender	- 255 characters
06 = FONT 06	1,5 x 2,9 mm	- 127 characters
07 = FONT 07	1,2 x 2,2 mm - descender	- 255 characters

Bitmap fonts proportional: bitmap fonts – proportional

21 = FONT 21	1,0; 9 (1,0; 13)	- 255 characters
22 = FONT 22	1,8; 14 (1,8; 21)	- 255 characters
23 = FONT 23	2,6; 21 (2,6; 31)	- 255 characters
24 = FONT 24	5,6; 45 (5,6; 67)	- 255 characters
28 = FONT 28	4,0; 32 (4,0; 48)	- 255 characters
29 = FONT 29	0,8; 6 (0,8; 9)	- 255 characters

To reach best print results it is recommended always to chose the biggest possible font.

Vector fonts proportional text: When in mode "proportional text", the height and width of text have to be entered in mm.
These values refer to the capital "M", i.e. the values of other characters are changing in proportion.

Vector fonts autoscale: When in autoscale mode, height and width of text has to be entered in mm.
The height of the text refers to all capital letters. When using small characters and descenders the height is changing in proportion. When entering the width, the complete file has to be considered. The text will be adjusted automatically, which means that the width of the characters is changing.

Definition of field attributes/field properties (optional)

Explanation: Additionally to mask set 'AM[ ] …' the possibility was created to define further field properties. In order to achieve a high flexibility, the field properties received own names/identifications. Therefore the sequence as well as the number of field properties are free. If necessary, the mask set 'AC[ ]' is transferred additionally to mask set 'AM[ ]' to the printer.

Structure mask set: (SOH)AC[ ]at1=*value*;at2= *value*;…(ETB)

Attribute (at):	**Description**
	ITF 14 (see chapter 'Mask set ITF code')
BT	Bearer bar type
BW	Bearer bar width
QZ	Quiet zone in 1/100 mm
	Field name (see page 10)
NAME	Definition of field name
	Field number (see page 14)
FN	Free definable field number

This table is constantly extended. The current version is available on demand.

Field Names

Application (customized)

When printing systems are connected to a computer system or machine controls, there is often the requirement that variable data is to be inserted into an existing layout. This data contents come from the superordinate computer system (database) or a machine control (e.g. PLC, scale, ERP system, etc.). Basically, it was always possible to integrate variable data into a 'loaded' layout (mask). The access to certain fields has been effected via the field index, i.e. a consecutive number. This field index is generated by Labelstar Office and can also change with layout changes, whereby the data allocation to the computer system/control is no longer correct.

Example

Print data

...

// TEXT (1/100 mm)

(SOH)**AM[1]2405;803;0;1;2;4;1;1;0**(ETB)

(SOH)**BM[1]Feld 1**(ETB)

// TEXT (1/100 mm)

(SOH)**AM[2]421;856;0;1;2;4;1;1;0**(ETB)

(SOH)**BM[2]Feld 2**(ETB)

// LINES: 2

...

The print data contains the definitions for the two text fields. The field index is always in **'[ ]'** of the mask or text setting.

If the text field 'Feld 1' is deleted on the label and then recreated, it gets a new index. In this case '2'. The text field 'Feld 2' gets the index '1'. As a result, an assignment via the field index is used only to a limited extend, without manual post-processing of the layout data.

Explanation

As an alternative to the field index, the assignment can also be made via the field name. A change in the field index has no longer any influence, and a changed layout is still filled in the right places with variable data of the computer system/control system.

Labelstar Office: The print data is supplemented by the following line:

(SOH)**AC[1]NAME="*Field name*"**(ETB)

The field content defined via the text block can be changed by the computer system/control with the following command:

(SOH)**BV[*Field name*]Feld 2**(ETB)

This results in the following standard procedure for the connection to a high-level control and/or computer system.

Label design with Labelstar Office

The field names are automatically transferred by Labelstar Office.

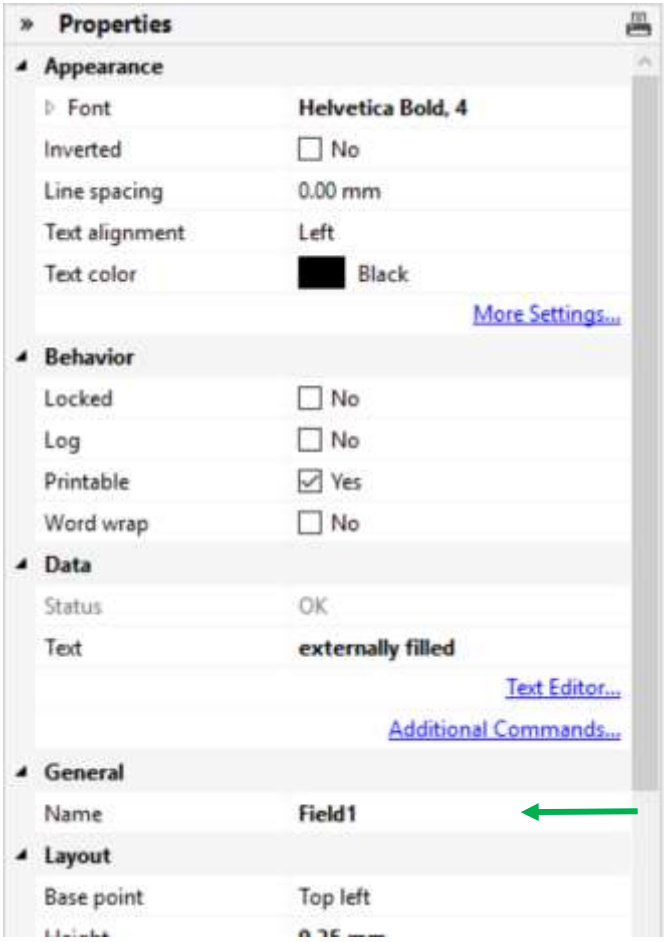

The desired field name (Field1) is entered in the properties of the text field.

For text fields, a printer-internal font must be used. The printer-internal fonts are marked by a printer symbol in the list.

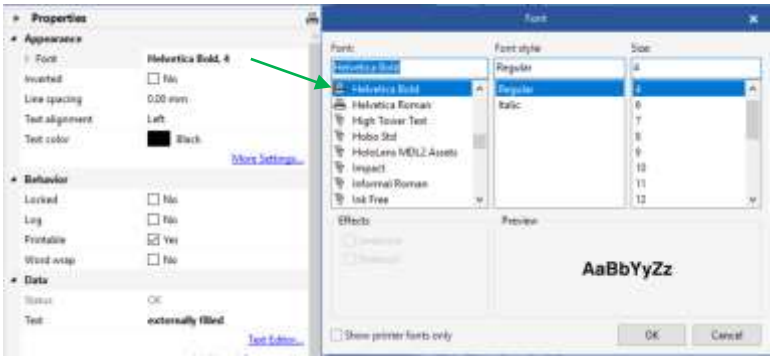

Export to a print file and save the layout in the external controller

When the label design is finished, the label is exported to a print file. For this, Labelstar Office uses the function **File – Export – Create Print Template**.

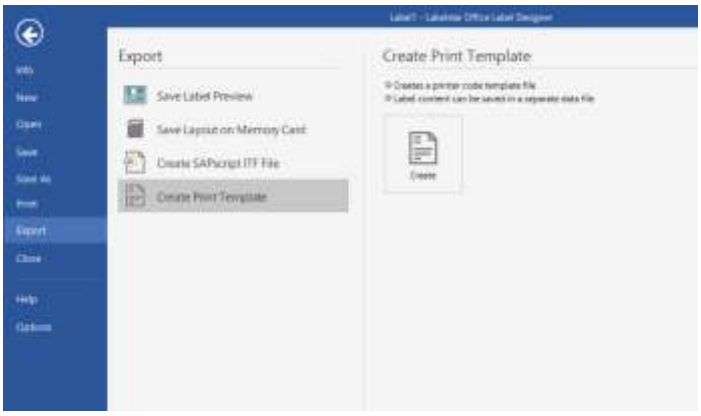

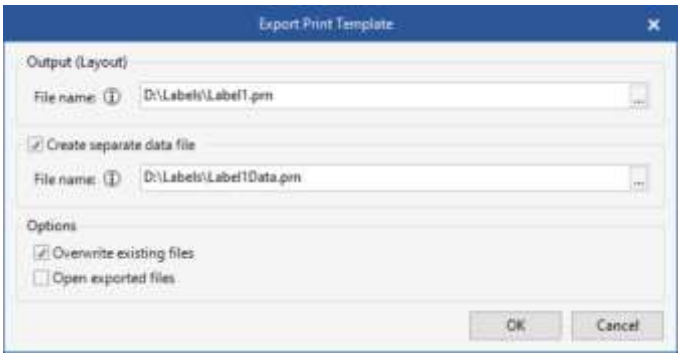

The option **Create separate data file** must be selected, otherwise the line (SOH)**FBC---r--------**(ETB) is included in the print file, which would immediately release a print procedure.

By starting a print procedure, this print file (layout definition / mask definition) is transferred from the controller/computer system to the printing system first.

Save the layout on the memory card of the printer

As an alternative to 'Export to a print file' the label layout is saved on the memory card of the printing system. For this, the memory card tool from Labelstar Office can be used.

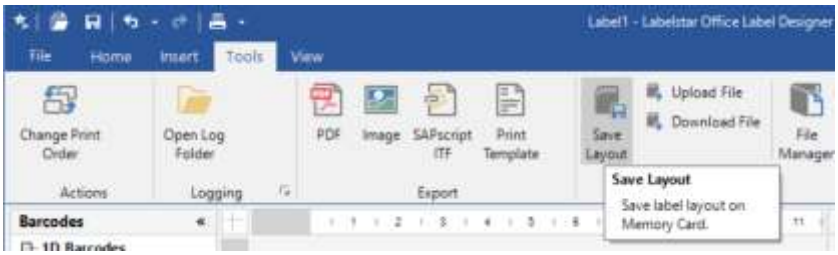

The layout must be called by the controller/computer system **before** filling the variable fields.

The following parameter set is used:

(SOH)**FMA---r*filename***(ETB)

The path name is determined when saving and possibly contains a path.
Example: "A:\Standard\eti1".

Filling the variable fields by the controller/computer system

The higher-level control can select the variable fields by the field names and set the contents. Subsequently, the print job is restarted.

Example

(SOH)**FMB---r*filename***(ETB)	Loading the layout from mc
(SOH)**BV[*ArtBez*]screws**(ETB)	Filling the field "ArtBez" with "screws"
(SOH)**BV[*ArtNr*]123456789**(ETB)	Filling the field "ArtNr" with "132456789"
(SOH)**FBC---r--------**(ETB)	Start printing

Field selection by free definable field number

With the following described attribute it is possible to assign a free definable field number to a field. This field number does not have to be clear, i.e. several fields can have the same field number. In this way the same field contents can be assigned to different fields.

The following attribute identification is defined:

Attribute	Description
FN	free definable field number

After the field number was assigned with AC mask statement,

(SOH)AC[n]FN=nr(ETB)

n = field index
nr = free definable field number

it is possible to access to the field and/or the fields with the new BF text statement:

(SOH)BF[nr]text(ETB)

nr = field number
text = field contents

<u>Example</u>

```
// Assignment of field number for field 1 and field 2
(SOH)AM[1]1000;2500;0;4;2;7;400;400;0(ETB)
(SOH)AC[1]FN=100(ETB)
(SOH)AM[2]2000;2500;0;30;2;4000;9;3;0;1(ETB)
(SOH)AC[2]FN=100(ETB)

// Access to field 1 and field 2 by field number
(SOH)BF[100]1234567890(ETB)
```

MASK SET

Text

AM[n]y;x;p;a;d;z;dy;dx;lp;dp	
A	identification for mask set
M	identification for protocol version
n	field number
y	Y coordinate in 1/100 mm
x	X coordinate in 1/100 mm
p	identification for phantom field 0 = print 1 = no print
a	identification for field type 1 = Bitmap Font 2 = Bitmap Font inverse 4 = Vector Font proportional 5 = Vector Font Autoscale 6 = Vector Font proportional inverse 7 = Vector Font Autoscale inverse
d	rotation 0 = 0° 1 = 90° 2 = 180° 3 = 270°
z	**character font for not proportional Bitmap fonts (1+2)** 01 = FONT 01 0,8 x 1,1 mm 127 characters 02 = FONT 02 1,2 x 1,7 mm 255 characters 03 = FONT 03 1,8 x 2,6 mm 255 characters 04 = FONT 04 4,0 x 5,6 mm 127 characters 05 = FONT 05 1,8 x 3,2 mm - descender 255 characters 07 = FONT 07 1,2 x 2,2 mm - descender 255 characters
	character font for proportional Bitmap fonts (1+2) 21 = FONT 21 (1,0; 13) 255 characters 22 = FONT 22 (1,8; 21) 255 characters 23 = FONT 23 (2,6; 31) 255 characters 24 = FONT 24 (5,6; 67) 255 characters 28 = FONT 28 (4,0; 48) 255 characters 29 = FONT 29 (0,8; 9) 255 characters
	character font for vector fonts (4-7) 01 = Helvetica Bold 02 = Helvetica Bold italics 03 = Helvetica Roman 04 = Helvetica Roman italics 05 = Swiss Light 06 = Swiss Light italics 07 = Baskerville 09 = Brush Script 08 = Baskerville italics 10 = Brush Script italics 11 = Monospace 12 = Monospace italics 17 = OCR-A 18 = OCR-A italics 19 = OCR-B 20 = OCR-B italics

dy	extension in direction Y Bitmap fonts factor 0…9 Vecor fonts character size in 1/100 mm Vector fonts Autoscale field height
dx	extension in direction X Bitmap fonts factor 0-9 Vector fonts character sign in 1/100 mm Vector fonts Autoscale field width
lp	distance between single characters in 1/100 mm
dp	datumpoint 1 = left top 2 = centre top 3 = right top 4 = left centre 5 = centre centre 6 = right centre 7 = left bottom (default) 8 = centre bottom 9 = right bottom

Standard code

AM[n]y;x;p;a;d;h;v1;v2;pz;z;dp	
A	identification for mask set
M	identification for protocol version
n	field number
y	Y position in 1/100 mm
x	X position in 1/100 mm
p	identification for phantom field 0 = print 1 = no print
a	identification for field type 30 = Code 39 31 = Code 2/5 interleaved 32 = EAN 8 33 = EAN 13 34 = UPC A 35 = UPC E 36 = CODABAR 37 = Code 128 38 = EAN ADD ON 39 = GS1-128 40 = Code 93 41 = PZN 42 = 2/5 Industrie 43 = Leitcode 44 = Identcode 46 = Code 39 extended 47 = Code 128 A 48 = Code 128 B 49 = Pharmacode
d	rotation 0 = 0° 1 = 90° 2 = 180° 3 = 270°
h	height of symbol in 1/100 mm
v1	relation 1; module width 'THICK'
v2	relation 2; module width 'THIN' res. SC factor
pz	check digit calculation 0 = no check digit calculation 1 = check digit calculation 4 = inverse - no check digit calculation 5 = inverse - check digit calculation
z	human readable line 0 = no human readable line 1 = with human readable line
dp	datumpoint 1 = left top 2 = centre top 3 = right top 4 = left centre 5 = centre centre 6 = right centre 7 = left bottom (default) 8 = centre bottom 9 = right bottom

ITF Code

AM[n]y;x;p;a;d;h;v1;v2;pz;z;dp	
A	identification for mask set
M	identification for protocol version
n	field number
y	Y position in 1/100 mm
x	X position in 1/100 mm
p	identification for phantom field 0 = print - 1 = no print
a	identification for field type 56 = ITF 14
d	rotation 0 = 0° 1 = 90° 2 = 180° 3 = 270°
h	height of symbol in 1/100 mm
v1	relation 1; module width 'THICK'
v2	relation 2; module width 'THIN' res. SC factor
pz	check digit calculation 0 = no check digit calculation 1 = check digit calculation 4 = inverse - no check digit calculation 5 = inverse - check digit calculation
z	human readable line 0 = no human readable line 1 = with human readable line
dp	datumpoint 1 = left top 2 = centre top 3 = right top 4 = left centre 5 = centre centre 6 = right centre 7 = left bottom (default) 8 = centre bottom 9 = right bottom

In order to print the bearer bars of an ITF 14 barcode, the following additional properties for Code 2/5 interleaved must be set:
For this the following field properties are determined:

Property identifier	Description
BT	bearer bar type 0 = no bars 1 = above/below 2 = rectangle
BW	bearer bar width in 1/100 mm
QZ	quiet zone in 1/100 mm

<u>Example</u>

```
// BARCODE (1/100 mm)
(SOH)AM[1]4498;7076;0;31;2;3000;12;4;0;1;3(ETB)
(SOH)AC[1]BT=2;BW=150;QZ=600(ETB)
(SOH)BM[1]1234567890123(ETB)
```

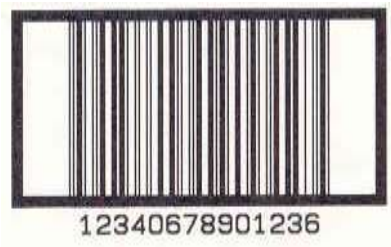

2D bar codes

PDF417

AM[n]y;x;p:a;d;s;rw;rh;ec;z;dp;c;r	
A	identification for mask set
M	identification for protocol version
n	field number
y	Y position in 1/100 mm
x	X position in 1/100 mm
p	identification for phantom field 0 = print 1 = no print
a	identification for field type 50 = PDF417
d	rotation 0 = 0° 1 = 90° 2 = 180° 3 = 270°
s	symbol size
rw	relation width
rh	relation height
ec	error correction level 0 - ECC Level = 0 1 - ECC Level = 2 2 - ECC Level = 6 3 - ECC Level = 14 4 - ECC Level = 30 5 - ECC Level = 62 6 - ECC Level = 126 7 - ECC Level = 254 8 - ECC Level = 510
z	style 0 = Standard 1 = Truncated 2 = Naked 3 = Bare
dp	datumpoint 1 = left top 2 = centre top 3 = right top 4 = left centre 5 = centre centre 6 = right centre 7 = left bottom (default) 8 = centre bottom 9 = right bottom
c	number of columns 0 = automatic, 1-30
r	number of rows 0 = automatic, 3-90

MAXICODE

AM[n]y;x;p;a;d;0;sn;ns;m;0;dp	
A	identification for mask set
M	identification for protocol version
n	field number
y	Y position in 1/100 mm
x	X position in 1/100 mm
p	identification for phantom field 0 = print 1 = no print
a	identification for field type 51 = MAXICODE
d	rotation 0 = 0° 1 = 90° 2 = 180° 3 = 270°
0	dummy
sn	symbol number
ns	quantity of symbols
m	mode 2 = Structured Message (US Carrier) 3 = Structured Message (International Carrier) 4 = Default message
0	dummy
dp	datumpoint 1 = left top 2 = centre top 3 = right top 4 = left centre 5 = centre centre 6 = right centre 7 = left bottom (default) 8 = centre bottom 9 = right bottom

DataMatrix

AM[n]y;x;p;a;d;s;aw;ah;ec;f;dp	
A	identification for mask set
M	identification for phantom field
n	field number
y	Y position in 1/100 mm
x	X position in 1/100 mm
p	identification for phantom field 0 = print; 1 = no print
a	identification for field type 52 = DataMatrix
d	rotation 0 = 0° 1 = 90° 2 = 180° 3 = 270°
s	symbol size in 1/100 mm
aw	relation width
ah	relation height
ec	error correction 0 - ECC Type = 0 ECC Level = 0 Overhead = 0 % 1 - ECC Type = 2* ECC Level = 40 Overhead = 33 % 2 - ECC Type = 3 ECC Level = 50 Overhead = 25 % 3 - ECC Type = 6 ECC Level = 80 Overhead = 33 % 4 - ECC Type = 8 ECC Level = 100 Overhead = 50 % 5 - ECC Type = 9* ECC Level = 110 Overhead = 75 % 6 - ECC Type = 10* ECC Level = 120 Overhead = 50 % 7 - ECC Type = 11* ECC Level = 130 Overhead = 67 % 8 - ECC Type = 12 ECC Level = 140 Overhead = 75 % 9 - ECC Type = 26 ECC Level = 200 Overhead = 0 %
f	format ID 0 - Format ID = 11 (numeric, 2000 characters)* 1 - Format ID = 1 (numeric, 500 characters) 2 - Format ID = 2 (alphabetical, 500 characters) 3 - Format ID = 3 (alphabetical + pointers, 500 characters) 4 - Format ID = 4 (alphanumeric, 500 characters) 5 - Format ID = 5 (7 Bit, 500 characters) 6 - Format ID = 6 (8 Bit, 500 characters) 7 - Format ID = 7 (pre-programmed, 500 characters)* 8 - Format ID = 12 (alphabetical, 2000 characters) 9 - Format ID = 14 (alphanumeric, 2000 characters)
dp	datumpoint 1 = left top 2 = centre top 3 = right top 4 = left centre 5 = centre centre 6 = right centre 7 = left bottom (default) 8 = centre bottom 9 = right bottom

* not supported from printer

GS1 DataMatrix

AM[n]y;x;p;a;d;s;aw;ah;ec;f;dp	
A	identification for mask set
M	identification for phantom field
n	field number
y	Y position in 1/100 mm
x	X position in 1/100 mm
p	identification for phantom field 0 = print; 1 = no print
a	identification for field type 52 = GS1 DataMatrix
d	rotation 0 = 0° 1 = 90° 2 = 180° 3 = 270°
s	symbol size in 1/100 mm
aw	relation width
ah	relation height
ec	error correction 0 - ECC Type = 0 ECC Level = 0 Overhead = 0 % 1 - ECC Type = 2* ECC Level = 40 Overhead = 33 % 2 - ECC Type = 3 ECC Level = 50 Overhead = 25 % 3 - ECC Type = 6 ECC Level = 80 Overhead = 33 % 4 - ECC Type = 8 ECC Level = 100 Overhead = 50 % 5 - ECC Type = 9* ECC Level = 110 Overhead = 75 % 6 - ECC Type = 10* ECC Level = 120 Overhead = 50 % 7 - ECC Type = 11* ECC Level = 130 Overhead = 67 % 8 - ECC Type = 12 ECC Level = 140 Overhead = 75 % 9 - ECC Type = 26 ECC Level = 200 Overhead = 0 %
f	format ID 0 - Format ID = 11 (numeric, 2000 characters)* 1 - Format ID = 1 (numeric, 500 characters) 2 - Format ID = 2 (alphabetical, 500 characters) 3 - Format ID = 3 (alphabetical + pointers, 500 characters) 4 - Format ID = 4 (alphanumeric, 500 characters) 5 - Format ID = 5 (7 Bit, 500 characters) 6 - Format ID = 6 (8 Bit, 500 characters) 7 - Format ID = 7 (pre-programmed, 500 characters)* 8 - Format ID = 12 (alphabetical, 2000 characters) 9 - Format ID = 14 (alphanumeric, 2000 characters)
dp	datumpoint 1 = left top 2 = centre top 3 = right top 4 = left centre 5 = centre centre 6 = right centre 7 = left bottom (default) 8 = centre bottom 9 = right bottom

* not supported from printer

CODABLOCK F

AM[n]y;x;p;a;d;h;nc;nl;m;s;dp	
A	identification for mask set
M	identification for protocol version
n	field number
y	Y position in 1/100 mm
x	X position in 1/100 mm
p	identification for phantom field 0 = print 1 = no print
a	identification for field type 53 = CODABLOCK F
d	rotation 0 = 0° 1 = 90° 2 = 180° 3 = 270°
h	height of line in symbole
nc	quantity of characters/line
nl	quantity of lines
m	mode
s	module size
dp	datumpoint 1 = left top 2 = centre top 3 = right top 4 = left centre 5 = centre centre 6 = right centre 7 = left bottom (default) 8 = centre bottom 9 = right bottom

GS1 DataBar (RSS)

AM[n]y;x;p;a;d;s;m;k;t;0;dp	
A	identification for mask set
M	identification for protocol version
n	field number
y	Y position in 1/100 mm
x	X position in 1/100 mm
p	identification for phantom field 0 = print 1 = no print
a	identification for field type 54 = GS1 DataBar (RSS)
d	rotation 0 = 0° 1 = 90° 2 = 180° 3 = 270°
s	number of segments per line [2…22]
m	module width [1 …12]
k	spacing correction [0,1,2]
t	symbol type 1 = GS1 DataBar Omnidirectional (RSS-14) 2 = GS1 DataBar Truncated (RSS-14 Truncated) 3 = GS1 DataBar Stacked (RSS-14 Stacked) 4 = GS1 DataBar Stacked Omnidirectional (RSS-14 Stacked Omnidirectional) 5 = GS1 DataBar Limited (RSS Limited) 6 = GS1 DataBar Expanded (RSS Expanded)
z	not in use
dp	datumpoint 1 = left top 2 = centre top 3 = right top 4 = left centre 5 = centre centre 6 = right centre 7 = left bottom (default) 8 = centre bottom 9 = right bottom

QR Code

AM[n]y;x;p;a;d;mo;cs;ms;cw;ec;dp	
A	identification for mask set
M	identification for protocol version
n	field number
y	Y position in 1/100 mm
x	X position in 1/100 mm
p	identification for phantom field 0 = print 1 = no print
a	identification for field type 57 = QR Code
d	rotation 0 = 0° 1 = 90° 2 = 180° 3 = 270°
mo	code model 1 = code model 1 2 = code model 2
cs	character set N = numeric A = alphanumeric B = 8-bit Byte K = Kanji
ms	masking -1 = auto 0-7 = mask x 8 = no masking
cw	line width in 1/100 mm per module possible values: 0-800
ec	error correction (restoring capacity) L = 7 % M = 15 % Q = 25 % H = 30 %
dp	datumpoint 1 = left top 2 = centre top 3 = right top 4 = left centre 5 = centre centre 6 = right centre 7 = left bottom (default) 8 = centre bottom 9 = right bottom

Aztec Code

AM[n]y;x;p;a;d;mo;cs;ms;cw;ec;dp	
A	identification for mask set
M	identification for protocol version
n	field number
y	Y position in 1/100 mm
x	X position in 1/100 mm
p	identification for phantom field 0 = print 1 = no print
a	identification for field type 61 = Aztec Code
d	rotation 0 = 0° 1 = 90° 2 = 180° 3 = 270°
h	symbol size in 1/100 mm (max 1 cm)
f	format 0 = Auto 1 = C15xC15 Compact 2 = C19xC19 Compact 3 = C23xC23 Compact 4 = C27xC27 Compact 5 = C19xC19 6 = C23xC23 7 = C27xC27 8 = C31xC31 9 = C37xC37 10 = C41xC41 11 = C45xC45 12 = C49xC49 13 = C53xC53 14 = C57xC57 15 = C61xC61 16 = C67xC67 17 = C71xC71 18 = C75xC75 19 = C79xC79 20 = C83xC83 21 = C87xC87 22 = C91xC91 23 = C95xC95 24 = C101xC101 25 = C105xC105 26 = C109xC109 27 = C113xC113 28 = C117xC117 29 = C121xC121 30 = C125xC125 31 = C131xC131 32 = C135xC135 33 = C139xC139 34 = C143xC143 35 = C147xC147 36 = C151xC151
ec	error correction (only if format = 0) 1 = 10 % 2 = 23 % 3 = 36 % 4 = 50 %
m	mode 0 = data 1 = runes (figures 0-255) 2 = Unicode (8 Bit ASCII) 3 = GS1 (not yet available)
0	dummy
dp	datum point 1 = left top 2 = centre top 3 = right top 4 = left centre 5 = centre centre 6 = right centre 7 = left bottom (default) 8 = centre bottom 9 = right bottom

Rectangle

AM[n]y;x;p;a;h;b;s;m;dp			
A	identification for mask set		
M	identification for protocol number		
n	field number		
y	Y position in 1/100 mm		
x	X position in 1/100 mm		
p	identification for phantom field 0 = print 1 = no print		
a	identification for field type 10 = rectangle		
h	height of rectangle in 1/100 mm		
b	width of rectangle in 1/100 mm		
s	line width in 1/100 mm		
m	line style; 1 digit		
dp	Datumpoint 1 = left top 4 = left centre 7 = left bottom (default)	2 = centre top 5 = centre centre 8 = centre bottom	3 = right top 6 = right centre 9 = right bottom

Line

AM[n]y;x;p;a;d;l;s;m;dp			
A	identification for mask set		
M	identification for protocol version		
n	field number		
y	Y position in 1/100 mm		
x	X position in 1/100 mm		
p	identification for phantom field 0 = print 1 = no print		
a	identification for field type 11 = line		
d	rotation 0 = horizontal 1 = vertical		
l	length in 1/100 mm		
s	line width in 1/100 mm		
m	line style, 1 digit		
dp	datumpoint 1 = left top 4 = left centre 7 = left bottom (default)	2 = centre top 5 = centre centre 8 = centre bottom	3 = right top 6 = right centre 9 = right bottom

Internal graphic

AM[n]y;x;p;a;d;dy;dx;dp	
A	identification for mask set
M	identification for protocol version
n	field number
y	Y position in 1/100 mm
x	X position in 1/100 mm
p	identification for phantom field 0 = print 1 = no print
a	identification for field type 3 = internal graphic
d	rotation 0 = 0° 1 = 90° 2 = 180° 3 = 270°
dy	extension in direction Y
dx	extension in direction X
dp	datumpoint 1 = left top 2 = centre top 3 = right top 4 = left centre 5 = centre centre 6 = right centre 7 = left bottom (default) 8 = centre bottom 9 = right bottom

TEXT SET

BM[n]text	
B	identification for text set
M	identification for extended protocol
n	field number
text	data contents, text

BV[n]text	
B	identification for text set
V	identification for selection by field name
n	field name
text	data contents, text

BF[n]text	
B	identification for text set
F	identification for selection by free definable field number
n	field number
text	data contents, text

Examples

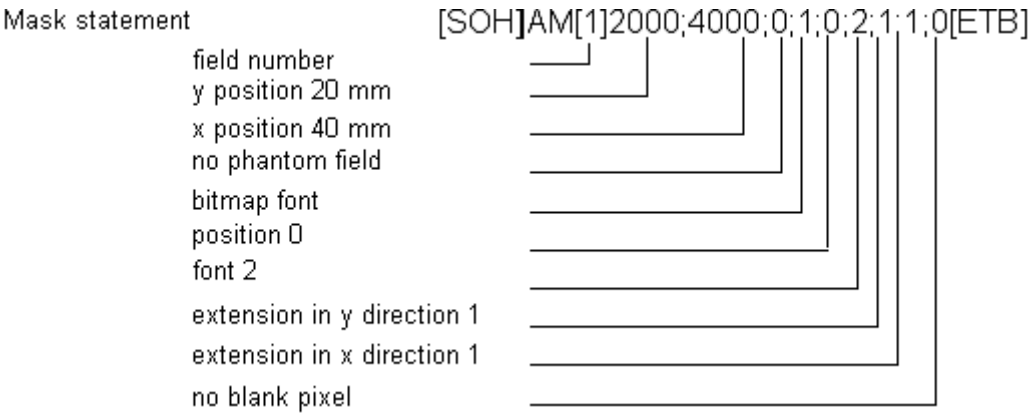

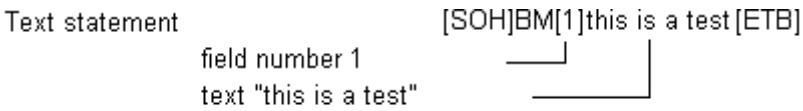

text set with variable definition: [SOH]BM[125]=CN(0,0,3,1,1)000[ETB]

Example label

ASCII data	Identification
⊗AM[1]3600;4600;0;33;0;1500;0;4;1;1⊕ $^{C}_{R}$ $^{L}_{F}$	mask set for bar code
⊗BM[1]444444444444⊕ $^{C}_{R}$ $^{L}_{F}$	appropriate text set
⊗AM[2]600;4700;0;4;0;1;300;200;24⊕ $^{C}_{R}$ $^{L}_{F}$	five mask sets vector font / proportional font
⊗AM[3]600;3100;0;4;0;1;400;300;24⊕ $^{C}_{R}$ $^{L}_{F}$	
⊗AM[4]1100;4700;0;4;0;1;400;300;24⊕ $^{C}_{R}$ $^{L}_{F}$	
⊗AM[5]1800;4700;0;4;0;1;300;200;24⊕ $^{C}_{R}$ $^{L}_{F}$	
⊗AM[6]1900;3700;0;4;0;1;600;400;24⊕ $^{C}_{R}$ $^{L}_{F}$	
⊗BM[2]Art.Nr. ⊕ $^{C}_{R}$ $^{L}_{F}$	five appropriate text sets
⊗BM[3]44444⊕ $^{C}_{R}$ $^{L}_{F}$	
⊗BM[4]Artikelbezeichnung⊕ $^{C}_{R}$ $^{L}_{F}$	
⊗BM[5]DM⊕ $^{C}_{R}$ $^{L}_{F}$	
⊗BM[6]99,-- ⊕ $^{C}_{R}$ $^{L}_{F}$	
⊗FBA000r06000000⊕	number of lines
⊗FBBA00r00001000⊕	number of items
⊗FBC000r00000000⊕	start

: graphic data in PCX format
⊗: SOH (1_{hex} bzw $5E_{hex}$)
⊕: ETB (17_{hex} bzw. $5F_{hex}$)
$^{C}_{R}$: CarrigeReturn ($0D_{hex}$)
$^{L}_{F}$: LineFeed ($0A_{hex}$)

GRAPHIC

General graphic format

This format is supported by all our printers but note that a 8 bit transmission is absolute necessary.

SOH	D	p	p	p	p	lb	lb	lb	b	b	b	gb……	ETB

			min.	max.
D	=	identification for graphic set		
p	=	pixel line from above	'0000'	'1900'
lb	=	1. byte from left	'000'	'100'
b	=	quantity of bytes	'1'	'100'
gb	=	graphic bytes		

Graphic byte:

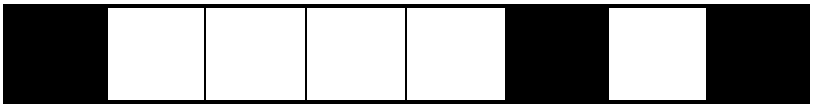

1 graphic bit = 0,083 x 0,083 mm

Graphic in PCX format

It is possible to transfer graphic data as a PCX-file (e.g. PaintBrush) to the printer. With this type of data transfer the PCX-file is transferred in a compressed form. Hereby the RLE-procedure is used and therefore the graphic data were reduced by approx. 30 %. This means that the effective transferring time for 300 dpi printers is cut in halves.

To set the printer ready for receiving PCX-data the protocol has to be switched over and hereby the following command set will be defined:

SOH	A	X	n	n	n	y	y	y	y	y	y	x	x	x	x	x	x	m	dp	ETB

n	Index of transferred graphic to printer internal maintenance at present not processed (000)
y	Y coordinate of graphic in 1/100 mm
x	X coordinate of graphic in 1/100 mm
m	Mode 0 = standard - background is overwritten Mode 1 = transparency - background is maintained Mode 2 = inverse - background is overwritten Mode 3 = inverse transparency - background is maintained
dp	Datumpoint 1 = left top 2 = centre top 3 = right top 4 = left centre 5 = centre centre 6 = right centre 7 = lleft bottom (default) 8 = centre bottom 9 = right bottom

- It is recommended to observe that directly after the final sign (ETB) no separator res. fill character such as $^{C}{}_{R}\,{}^{L}{}_{F}$ is indicated.
- The printer supports the following PCX versions: 5, 3, 2 and 0.
- It is necessary that the corresponding PCX-file is available as monochrome (black/white).
- The graphic has to be available in the original size as the printer is not able to change the size by itself.

Before print start, indicated by parameter set 'FBC', the definition of field number, lines and pieces has to be effected via the parameter sets (FBA res. FBB).

Example of PCX file

-*** PCX_GRAPHIC-INFO ***-	
⊗AX0010015300100941⊕##	
⊗AM[1]3600;4600;0;33;0;1500;0;4;1;1⊕ $^{C}_{R}$ $^{L}_{F}$	mask set for bar code
⊗BM[1]444444444444⊕ $^{C}_{R}$ $^{L}_{F}$	appropriate text set
⊗AM[2]600;4700;0;4;0;1;300;200;24⊕ $^{C}_{R}$ $^{L}_{F}$ ⊗AM[3]600;3100;0;4;0;1;400;300;24⊕ $^{C}_{R}$ $^{L}_{F}$ ⊗AM[4]1100;4700;0;4;0;1;400;300;24⊕ $^{C}_{R}$ $^{L}_{F}$ ⊗AM[5]1800;4700;0;4;0;1;300;200;24⊕ $^{C}_{R}$ $^{L}_{F}$ ⊗AM[6]1900;3700;0;4;0;1;600;400;24⊕ $^{C}_{R}$ $^{L}_{F}$	five mask set vector font / proportional font
⊗BM[2]Art.Nr. ⊕ $^{C}_{R}$ $^{L}_{F}$ ⊗BM[3]44444⊕ $^{C}_{R}$ $^{L}_{F}$ ⊗BM[4]Artikelbezeichnung⊕ $^{C}_{R}$ $^{L}_{F}$ ⊗BM[5]DM⊕ $^{C}_{R}$ $^{L}_{F}$ ⊗BM[6]99,-- ⊕ $^{C}_{R}$ $^{L}_{F}$	Five appropriate text sets
⊗FBA00r06000000⊕ ⊗FBBA00r00001000⊕ ⊗FBC000r00000000⊕	set number of lines (FBA…) set quantity (FBBA…) start print order (FBC…)

: graphic data in PCX format
⊗: SOH (1_{hex} bzw $5E_{hex}$)
⊕: ETB (17_{hex} bzw. $5F_{hex}$)
$^{C}_{R:}$ CarrigeReturn ($0D_{hex}$)
$^{L}_{F:}$ LineFeed ($0A_{hex}$)

VARIABLES

Set structure

SOH	BM	[n]	=	v	v	(	p1	p2	p…	pn	)	t1	t2	t…	t70	ETB

The grey marked part corresponds to the variable definition. The text entered from t1 to t70 is added to the function result of variable.

= start of function

vv variable type
- SC link field
- CN counter
- CC extended counter
- CL date/time
- CU currency variable
- SH shift variable
- UG user guiding
- MD memory card data

(start of variable parameter block

p1…pn variable parameter

) end of variable parameter block

Note: In case you want to print a text which corresponds exactly to the variable definition then you have to place '!' before.

SOH	BM	[n]	!	=	v	v	(	p1	p2	p…	pn	)	t1	t2	t…	t70	ETB

Link field

SOH	BM	[n]	=	S	C	(	p1	;	p2	;	p…	;	pn	)	t1	t2	t…	t70	ETB

= SC identification of link field
p1…pn identification of link elements (field number or constant text)
field number is entered wihtout leading '0'
constant text is included in " but these marks are not printed

Note: Reference fields can be constant text or variables but no link fields.

Example: = SC(1;2;3) print: field1field2field3
= SC(1;“constant“;2) print: field1constantfield2

Counter

SOH	BM	[n]	=	C	N	(	t	;	m	;	c	;	+/-	s	;	i	;	h	;	r	)	t1	t2	t…	t70	ETB

= CN identification counter

t type of counter
0 numerical
1 letters only
2…36 radix, base of the counter

m function mode of counter
0 standard
1 return to start value
2 enter the start value at the beginning of printing
(default = existing start value)
3 enter the start value at the beginning of printing
(default = last final number)
4 reset start value at cycle end
(only for DPM IIIi)
5 reset start value by I/O signal
6 time-controlled resetting
7 time-controlled resetting with input of initial value
(default = last final value)

c digit where the numbering starts counting

+/− direction
+ adding
− subtracting

s step width

i update interval
(number of labels with identical number)

h time by which the counter is reset (function mode 6 and 7) in format 'HH:MM'
e.g. 00:00 = reset counter at 0:00
(optional, only for function mode 6 and 7)

r reset value
(optional, only for function mode 6 and 7; default = text and/or initial value)

Limitation:
The time-controlled resetting of counter variable is only effected in case of an active print order. If a print order is cancelled before the specified time and afterwards again restarted then no resetting of counter value is effected.

t1, t2, … text res. start value of counter

<u>Example:</u>

Entry: =CN(10;7;4;+1;1;06:00;0001)1234

The enquiry for the initial value is effected at print start and at 6:00 the counter variable is reset to value 0001.

Extended counter

SOH	BM	[n]	=	C	C	(	+/-	s	;	i	;	m	;	z	;	n	;	x	)	t	ETB

= CC identification of numeric counter

+/− direction
- + counter adding
- − counter subtracting

s step width

i update interval
(number of labels with identical number)

m function mode of counter
- 0 standard
- 1 return to start value
- 2 enter the start value at the beginning of printing (default = existing start value)
- 3 enter the start value at the beginning of printing (default = last final number)
- 4 reset start value at cycle end (only for DPM IIIi)
- 5 set min. / max. value
- 6 set start value
- 7 print end

z leading zeros

- 0 no leading zeros
- 1 printout with leading zeros

n minimum value (max. -999999999)

x maximum value (max. 999999999)

t start value
(the number of digits determines the format for the printout with leading zeros
(max. 999999999)

<u>Example:</u>

Entry: =CC(+1;2;5;0;1,999)0050

Print: 50, 51,…999, 1, 2, …

Date / Time

SOH	BM	[n]	=	C	L	(	m	;	d	;	i	;	n	;	c	;	mo	;	pd	;	pm	;	md	;	mm	;	rw	;	ws	)	t1	t…	t70	ETB

= CL identification date/time
m month offset to the actual date
d day offset to the actual date
i update interval (0 = at the beginning of a print order, 1 = each label)

Optional parameters

n minute offset ot the actual time
(negavive entry/value possible)
c correction month overflow (0 = change to the next month, 1 = remain in current month)

Optional parameters for BBE date

mo entry mode 0: standard; display current date of real time clock
1: display calculated date, modification possible
2: display calculated date, no modification possible
pd max. positive correction days
pm max. positive correction months
md max. negative correction days
mm max. negative correction months

Optional parameters for rounded date

rw rounded weekday: 1 = Sunday … 7 = Saturday; 0 = no rounding
ws start of week, format: "D-HH:MM", e.g. 1-00:00 = Sunday, 0:00 Uhr

Examples:

Actual date as per Real Time Clock: 25.02.08

Entry: =CL (0;0;0)<DD.MO.YY> Print: 25.02.08
Entry: =CL (1;1;0)<DD.MO.YY> Print: 26.03.08

Example for BBE date

Entry: =CL(0;0;0;0;0;1;3;2;3;2)<DD.MO.YY> At print start the calculated date is displayed at the printer and can be modified (+/− 3 days and +/− 2 months):

Display:

Example for rounded date

The beginning of the week is on Sunday at 00:00. The date of Monday should be printed the whole week.

Entry: =CL(0;0;0;0;0;0;0;0;0;0;2;1-00:00)<DD.MO.YY>

Current date	Rounded date
23.02.2008 23:59:59	18.02.2008
24.02.2008 00:00:00	25.02.2008
25.02.2008	25.02.2008
01.03.2008 23:59:59	25.02.2008
02.03.2008 00:00:00	03.03.2008

Format identifier

Standard format	
HH	Hours 2-digit (24 hours)
HE	**Hours 2-digit (12 hours)**
MI	Minutes 2-digit
SS	Seconds 2-digit
AM	**AM/PM output**
DD	Day 2-digit
MO	Month 2-digit
YYYY	Year 4-digit
YY	Year 2-digit
Y	Year 1-digit
WW	Calendar week
DW	Day of week (Sunday = 0)
DW1	Day of week (Sunday = 1)
DwX	Day of week An arbitrary ASCII character can be used for x, from which it is counted consecutively.
DOWxxxxxxx	Day of week - variable For x, any ASCII character can be used. The first ‚x‘ denominates Sunday, the next denominates Monday and so on until Saturday For each weekday a character must be created
DOY	Day of year 3-digit (First January = 1)
DY	Day of year 3-digit (First January = 0)
Examples	
DD.MO.YY	10.09.06
MO/DD/YYYY	09/10/2006
YY-MO-DD	06-09-10
YYMODD	060910

The format identifier 'HE' and 'AM'/'am'/'Am' are supplemented. Therefore the output of hours in 12-hours mode is possible. By the additional output of format identifier 'AM' the output of time in american/english format is possible.

<u>Examples:</u>

=CL(0;0;0;0)<HH:MI:SS> -> 15:30:00
=CL(0;0;0;0)<HE:MI:SS> -> 03:30:00
=CL(0;0;0;0)<HE:MI:SS AM> -> 03:30:00 PM
=CL(0;0;0;0)<HE:MI:SS am> -> 03:30:00 pm
=CL(0;0;0;0)<HE:MI:SS Am> -> 03:30:00 p.m.

By separating the output of time and AM/PM output in 2 text fields, also the following output format is possible: 03:30:00 pm

Extended format	
XMO	Name of month short
XSO	Name of month long
XSD	Weekday short
XLD	Weekday long
For X you can enter the country identification of desired language	
C = Canadian D = Danish E = English F = French G = German I = Italian N = Dutch O = Norwegian S = Spanish U = Finnish W = Swedish	
Examples:	
DD.EMO.YY	10.SEP.06
DD.ESO YYYY	10. September 2006
ELD,DD.GMO.YY	Sunday, 10. SEP.06
ESD,DD.MO.YY	DO, 10.09.06

Extended format - XMO

C	JA	FE	MR	AL	MA	JN	JL	AU	SE	OC	NO	DE
D	JAN	FEB	MAR	APR	MAJ	JUN	JUL	AUG	SEP	OKT	NOV	DEC
E	JAN	FEB	MAR	APR	MAY	JUN	JUL	AUG	SEP	OCT	NOV	DEC
F	JAN	FEV	MAR	AVR	MAI	JUIN	JUIL	AOU	SEP	OCT	NOV	DEC
G	JAN	FEB	MRZ	APR	MAI	JUN	JUL	AUG	SEP	OKT	NOV	DEZ
I	GEN	FEB	MAR	APR	MAG	GIU	LUG	AGO	SET	OTT	NOV	DIC
N	JAN	FEB	MRT	APR	MEI	JUN	JUL	AUG	SEP	OKT	NOV	DEC
O	JAN	FEB	MAR	APR	MAI	JUN	JUL	AUG	SEP	OKT	NOV	DES
S	ENE	FEB	MAR	ABR	MAY	JUN	JUL	AGO	SEP	OCT	NOV	DIC
U	TAM	HEL	MAA	HUH	TOU	KES	HEI	ELO	SYY	LOK	MAR	JOU
W	JAN	FEB	MAR	APR	MAJ	JUN	JUL	AUG	SEP	OKT	NOV	DEC

Extended format - XSO

C	January	February	March	April	May	June
D	Januar	Februar	Marts	April	Maj	Juni
E	January	February	March	April	May	June
F	Janvier	Février	Mars	Avril	Mai	Juin
G	Januar	Februar	Maerz	April	Mai	Juni
I	Gennaio	Febbraio	Marzo	Aprile	Maggio	Giugno
N	Januari	Februari	Maart	April	Mei	Juni
O	Januar	Februar	Mars	April	Mai	Juni
S	Enero	Febrero	Marzo	Abril	Mayo	Junio
U	Tammikuu	Helmikuu	Maaliskuu	Huhtikuu	Toukokuu	Kesaekuu
W	Januari	Februari	Mars	April	Maj	Juni

C	July	August	September	October	November	December
D	Juli	August	September	Oktober	November	December
E	July	August	September	October	November	December
F	Juillet	Août	Septembre	Octobre	Novembre	Décembre
G	Juli	August	September	Oktober	November	Dezember
I	Luglio	Agosto	Settembre	Ottobre	Novembre	Dicembre
N	Juli	Augustus	September	Oktober	November	December
O	Juli	August	September	Oktober	November	Desember
S	Julio	Agosto	Septiembre	Octubre	Noviembre	Diciembre
U	Heinaekuu	Elokuu	Syyskuu	Lokakuu	Marraksuu	Joulukuu
W	Juli	Augusti	September	Oktober	November	December

Extended format - XSD

C	SUN	MON	TUE	WED	THU	FRI	SAT
D	SO	MA	TI	ON	TO	FR	LO
E	SUN	MON	TUE	WED	THU	FRI	SAT
F	DIM	LUN	MAR	MER	JEU	VEN	SAM
G	SO	MO	DI	MI	DO	FR	SA
I	DOM	LUN	MAR	MER	GIO	VEN	SAB
N	ZO	MA	DI	WO	DO	VR	ZA
O	SO	MA	TI	ON	TO	FR	LO
S	DOM	LUN	MAR	MIE	JUE	VIE	SAB
U	SU	MA	TI	KE	TO	PE	LA
W	SO	LA	TI	ON	TO	FR	LO

Extended format - XLD

C	Sunday	Monday	Tuesday	Wednesday	Thursday	Friday	Saturday
D	Søndag	Mandag	Tirsdag	Onsdag	Torsdag	Fredag	Lørdag
E	Sunday	Monday	Tuesday	Wednesday	Thursday	Friday	Saturday
F	Dimanche	Lundi	Mardi	Mercredi	Jeudi	Vendredi	Samedi
G	Sonntag	Montag	Dienstag	Mittwoch	Donnerstag	Freitag	Samstag
I	Domenica	Lunedi	Martedi	Mercoledi	Giovedi	Venerdi	Sabato
N	Zondag	Maandag	Dinsdag	Woensdag	Donderdag	Vrijdag	Zaterdag
O	Søndag	Mandag	Tirsdag	Onsdag	Torsdag	Fredag	Lørdag
S	Domingo	Lunes	Martes	Miércoles	Jueves	Viernes	Sábado
U	Sunnuntai	Maanantai	Tiistai	Keski-viikko	Torstai	Perjantai	Lauantai
W	Söndag	Måndag	Tisdag	Onsdag	Torsdag	Fredag	Lördag

Currency variable

SOH	B	n	n	=	C	U	(	a	;	b	;	c	;	d	;	e	;	f	;	g	)	t1	t2	t…	t70	ETB

= CU	Signification of variable Euro
a	ANSI-Code of thousand separator as decimal figure
b	ANSI-Code of comma separator as decimal figure
c	Quantity of numbers after the comma as decimal figure
d	Operand A
e	Operand B
f	Operand C
g	Rounding format
t1, t2, …	Format string, is indicated by "< >"

Before the processing the variable Euro calculates the term

$$\frac{A \times B}{C}$$

Example:
In case the contents of field 20 has to be converted from USD into EUR the definition of varible for the user defined format is as follows:

B01 "=CU(46;44;2;20;"1,0";"0,68861";"0,01")Result: <>Euro"
B20 1.250,44 USD

Printout: 1.250,44 USD
Result: 1.815,89 Euro*

* 1 USD = 0,68861 Euro (11.01.2010)

Shift variable

SOH	BM	[n]	=	S	H	(	)	t1	t2	t…	t70	ETB

= SH identification of shift variable

Note: The shift variable did not need any parameters. The settings for the output are defined with the corresponding parameter sets. (see above)

Example: The shift times are defined: 00:00 - 11:59 "Shift1"
12:00 - 23:59 "Shift2"
=SH() Printout at 10:00 o'clock: "Shift1"
=SH() Printout at 13:00 o'clock: "Shift2"

Set shift times

SOH	F	C	I	D	-	-	r	N	N	H	H	M	M	h	h	m	m	ETB

NN = ID [01 … 24]
HH = start hour
MM = start minute
hh = end hour
mm = end minute

Enquire shift times

SOH	F	C	I	D	-	-	w	N	N	p	p	p	p	p	p	p	p	p	p	ETB

Answer

SOH	A	N	N	H	H	M	M	h	h	m	m	p	p	p	p	p	p	p	p	ETB

Set shift text

SOH	F	C	I	E	-	-	r	N	N	T	T	T	T	T	T	T	T	T	T	ETB

NN = ID [01 … 24]
T = max. 10 characters

Enquire shift text

SOH	F	C	I	E	-	-	w	N	N	p	p	p	p	p	p	p	p	p	ETB

Answer

SOH	A	N	N	;	T	T	T	T	T	T	T	T	T	T	;	p	p	p	p	p	p	p	p	ETB

User guiding

SOH	BM	[n]	=	U	G	(	c	;	t	;	m	;	ap	;	ae	;	sp	)	t1	t2	t…	t70	ETB

= UG identification user guiding

c start position for the entry

t type of entry
- 0 numerical
- 1 alphanumerical

m mode of entry
- 0 do not jump over special characters
- 1 jump over special characters

ap alignment print
- 0 aligned to the right side

ae alignment entry
- 0 aligned to the right

sp prompt text for the variable, max. 24 characters
The entry has to be included in ".

<u>Example:</u>

Entry: =UG(1;0;0;0;0;"Enter article no")<000000>

Display:

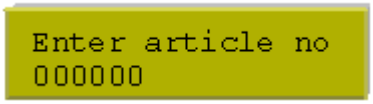

Memory card data

SOH	BM	[n]	=	M	D	(	FN="filename"	;	SE='x'	;	CH=x	;	SC="x"	;	SF="x"	;	RC="x"	)	ETB

= MD identification of memory card data

FN file name of table onto memory card with CSV data
SE Separator sign (default = ';')
CH column name in the first line (0 = no, 1 = yes)
SC name and/or number of column that should be referenced
SF field name and/or field index of field onto the label, which contains the searched data
RC name and/or number of column, which contains the data to be printed

Remark: If in parameter SF a field name is indicated, this must have beed defined for the appropriate field by an AC attribute statement!

Example:

AC[1]NAME="FCODE"
BM[2]=MD(FN="a:\daten.csv";SE=';';CH=1;SC="Farbcode";SF="FCODE";RC="IC-Nummer")

Field 1	**Printout field Feld 2**
00001	121478242
23252	784587448

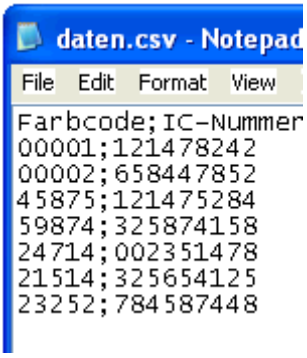

GS1-128 Parser

Note: By means of this variable type, the content of an application identifier in a GS1-128 bar code can be determined.

SOH	BM	[n]	=	A	I	(	p	;	Ai	)	ETB

= AI identification of GS1-128 parser

p identification of the link element (field number)
Ai application identifier

Example: Field 1 ="00123456789012345675" GS1-128 with AI00

=AI(1;"00") Printout: 123456789012345675

EPC calculation (Electronic Product Code)*

SOH	BM	[n]	=	E	P	C	(	M	;	L	;	F	;	P	;	N1	;	{N2}	)	ETB

= EPC identification of EPC calculationKennung EPC Berechnung

M coding method
L length of manufacturer number (company prefix)
F filter value
P verification of check digit
N1 identification of link element (field number)
N2 identification of link element (field number) - optional

Note: For more information, visit the following web sites: www.epcglobalinc.org or www.gs1.org

Parameter	**Value range**		
M	0 = Coding method SSCC96	3 = Coding method GRAI96	
	1 = Coding method SGTIN96	4 = Coding method GIAI96	
	2 = Coding method SGLN96		
L	6…12		
F	**Coding**	**Filter value**	**Binary value**
	SSCC96	All Others	000
		Undefined	001
		Logistical / Shipping Unit	010
	SGTIN96	All Others	000
		Retail Consumer Trade Item	001
		Standard Trade Item Grouping	010
		Single Shipping / Consumer Trade Item	011
	SGLN	All Others	000
		Physical Location	001
	GRAI	All Others	000
	GIAI	All Others	000
P	0 = no verification; 1 = verification of check digit		
N1	any		
N2	any		

Example 1: Field 1 ="00123456789012345675“ GS1-128 with AI00
Field 2 =AI(1;“00“) Printout: 123456789012345675
Field 3 =EPC(0;12;0;1;2) Printout: 3100DA7557D32C38E7000000

The EPC is calculated with the content of Field 2. The coding method SSCC96 is used. In Field 2 a valid NVE must be represented (18-digit, correct check digit).

Example 2: Field 1 ="4141234567890128254123“ GS1-128 with AI00, AI254
Field 2 =AI(1;“414“) Printout: 1234567890128
Field 3 =AI(1;“254“) Printout: 123
Field 4 =EPC(2;10;0;0;2;3) Printout: 3208499602D218000000007B

The EPC is calculated with the content of Field 2 and Field 3. The coding method SGLN96 is used. In Field 2 a valid ILN must be represented (13-digit). In the example, Field 3 contains an optional serial number. No verification of check digit of ILN (8) is effected.

* nur bei Verwendung der Option RFID

Check digit

SOH	BM	[n]	=	C	D	(	d	;	s	;	l	;	t	;	w	;	m	;	r	;	o	)	t1	t…	t70	ETB

= CD Identification of check digit

d Data for check digit calculation (field number of constant text)
Constant text is enclosed in "".

s Start position within data

1 …n Start calculation at digit x

l Number of digits. If the parameter is not indicated, the remaining data (from start position) is used for the check digit calculation.

t Check digit type

0 Modulo 10 (weighting 3)
1 Modulo 11
2 Modulo 43
3 Modulo 47 (weighting 15)
4 Modulo 47 (weighting 20)
5 Modulo 103
6 Benutzerdefiniert

Optional parameters for customized check digit

w Weighting.
Constant text enclosed in "" - contains the individual weighting values or an interval.
Individual values: "x_1,x_2"
Interval: "x_1…x_2"

m Modulo

r Add result to

o Print only one digit

0 No
1 Yes

Example:

Entry: =CD("123456789012";0;0;0)
Printout: 8

Entry: =CD("1234567890";0;0;6;"1,3";10;10;1)
Printout: 5

Substring

SOH	BM	[n]	=	S	S	(	d	;	s	;	l	)	ETB

= SS Identification of substring

d Data used for substring extraction (field number or field name or constant text.
Constant text is enclosed in "".

s Start position within data. If this parameter is omitted, the substring extraction starts with the 1st character of the data string.
1 n Start at digit x

l Number of digits. If this parameter is omitted, all characters from the start position to the end of the data string are returned.
1 …n At the start position x digits

Example:

	Entry:	=SS("1234567890";4;3)
	Printout:	456
		Field "ARTIKELNR" has the contents "370012330295"
	Entry:	=SS(ARTIKELNR;1;4)
	Printout:	3700

PARAMETER SETS

Label parameter

Set label photocell type

SOH	F	C	D	E	-	-	r	N	-	-	-	-	-	-	-	ETB

N = 0 – transmission photocell normal
N = 1 – reflexion photocell
N = 2 – transmission photocell inverse
N = 3 – reflexion photocell inverse
N = 4 – ultrasonic photocell (option)*

Enquire label photocell type

SOH	F	C	D	E	-	-	w	p	p	p	p	p	p	p	p	ETB

Answer

SOH	A	N	-	-	-	-	-	-	-	p	p	p	p	p	p	p	p	ETB

Set label type

SOH	F	C	D	A	-	-	r	N	-	-	-	-	-	-	-	ETB

N = 0 – selection of adhesive labels (automatical measure process)
N = 1 – selection of continuous labels

Enquire label type

SOH	F	C	D	A	-	-	w	p	p	p	p	p	p	p	p	ETB

Answer

SOH	A	N	-	-	-	-	-	-	-	p	p	p	p	p	p	p	p	ETB

Measure label
In case of loading a new label roll it is possible to start measuring by this command.

SOH	F	C	B	-	-	-	r	-	-	-	-	-	-	-	-	ETB

The current label and gap length in the printer can be send to the Host computer:

SOH	F	C	B	-	-	-	w	p	p	p	p	p	p	p	p	ETB

After this command the printer sends the following answer:

Answer

SOH	A	E	E	E	E	S	S	S	S	p	p	p	p	p	p	p	p	ETB

EEEE indicates the label length in mm (ASCII)
SSSS indicates the gap length in mm (ASCII)

* only Spectra 108/12, 162/12 and SPE 107/12, 160/12

Set measure label automatically after switching on

SOH	F	C	C	A	-	-	r	N	-	-	-	-	-	-	-	ETB

N = 0 - Off
N = 1 - On

Enquire measure label automatically after switching on

SOH	F	C	C	A	-	-	w	p	p	p	p	p	p	p	p	ETB

Answer

SOH	A	N	-	-	-	-	-	-	-	p	p	p	p	p	p	p	p	ETB

Set label length in 1/100 mm

SOH	F	C	C	L	-	-	r	N	N	N	N	N	N	N	-	ETB

N: value of label length in 1/100 mm, 7 digit ASCII number

Enquire label length in 1/100 mm

SOH	F	C	C	L	-	-	w	N	N	N	N	N	N	N	-	ETB

Answer

SOH	A	N	N	N	N	N	N	N	-	p	p	p	p	p	p	p	p	ETB

Set gap length in 1/100 mm

SOH	F	C	C	M	-	-	r	M	M	M	M	M	-	-	-	ETB

M: value of gap length in 1/100 mm, 5 digit ASCII number

Enquire gap length in 1/100 mm abfragen

SOH	F	C	C	M	-	-	w	M	M	M	M	M	-	-	-	ETB

Answer

SOH	A	M	M	M	M	M	-	-	-	p	p	p	p	p	p	p	p	ETB

Set label width in 1/100 mm

SOH	F	C	C	O	-	-	r	N	N	N	N	N	N	N	ETB

N: indication of label width in 1/100 mm, 7 digit ASCII number

Enquire label width in 1/100 mm

SOH	F	C	C	O	-	-	w	P	P	P	P	P	P	P	P	ETB

Answer

SOH	A	N	N	N	N	N	N	N	-	p	p	p	p	p	p	p	p	ETB

Set label error length

SOH	F	C	D	G	A	-	r	N	N	N	-	-	-	-	-	ETB

NNN = Indication of label error length in mm (1 … 999)

Enquire label error length

SOH	F	C	D	G	A	-	w	p	p	p	p	p	p	p	p	ETB

Answer

SOH	A	N	N	N	-	-	-	-	-	p	p	p	p	p	p	p	p	ETB

Set label synchronization

SOH	F	C	D	G	B	-	r	N	-	-	-	-	-	-	-	ETB

N = 0 – Off
N = 1 – On

Enquire label synchronization

SOH	F	C	D	G	B	-	w	p	p	p	p	p	p	p	p	ETB

Answer

SOH	A	N	-	-	-	-	-	-	-	p	p	p	p	p	p	p	p	ETB

Set number of columns

SOH	F	C	C	H	A	-	r	N	-	-	-	-	-	-	-	ETB

N = number of columns (1 … 9)

Enquire number of columns

SOH	F	C	C	H	A	-	w	p	p	p	p	p	p	p	p	ETB

Answer

SOH	A	N	-	-	-	-	-	-	-	p	p	p	p	p	p	p	p	ETB

Set column width

SOH	F	C	C	H	B	-	r	N	N	N	-	-	-	-	-	ETB

NNN: indication of column width in 1/10 mm (0 … 999)

Enquire column width

SOH	F	C	C	H	B	-	w	p	p	p	p	p	p	p	p	ETB

Answer

SOH	A	N	N	N	-	-	-	-	-	p	p	p	p	p	p	p	p	ETB

Set label alignment

SOH	F	C	C	J	-	-	r	N	-	-	-	-	-	-	-	ETB

N = 0: left
N = 1: centre
N = 2: right

Enquire label alignment

SOH	F	C	C	J	-	-	w	p	p	p	p	p	p	p	p	ETB

Answer

SOH	A	N	-	-	-	-	-	-	-	p	p	p	p	p	p	p	p	ETB

Set contrast

SOH	F	C	A	B	-	-	r	N	N	N	-	-	-	-	-	ETB

NNN: Indication of contrast in % (010 … 200)
It is necessary to transmit a 3 digit ASCII number

Enquire contrast

SOH	F	C	A	B	-	-	w	p	p	p	p	p	p	p	p	ETB

Answer

SOH	A	N	N	N	-	-	-	-	-	p	p	p	p	p	p	p	p	ETB

Set flip label

SOH	F	C	D	O	-	-	r	N	-	-	-	-	-	-	-	ETB

N = 0 – flip label Off
N = 1 – flip label On

Enquire flip label

SOH	F	C	D	O	-	-	w	p	p	p	p	p	p	p	p	ETB

Answer

SOH	A	N	-	-	-	-	-	-	-	p	p	p	p	p	p	p	p	ETB

Set label rotation

SOH	F	C	D	N	-	-	r	X	-	-	-	-	-	-	-	ETB

X = 0 – rotate label Off
X = 1 – rotate label On

Enquire label rotation

SOH	F	C	D	N	-	-	w	p	p	p	p	p	p	p	p	ETB

Answer

SOH	A	X	-	-	-	-	-	-	-	p	p	p	p	p	p	p	p	ETB

Set operating mode flip/rotate label

SOH	F	C	D	S	-	-	r	N	-	-	-	-	-	-	-	ETB

N = 0 – flip/rotate label at the centre point of label
N = 1 – flip/rotate label at the centre point of printhead

Enquire operating mode flip/rotate label

SOH	F	C	D	S	-	-	w	p	p	p	p	p	p	p	p	ETB

Answer

SOH	A	N	-	-	-	-	-	-	-	p	p	p	p	p	p	p	p	ETB

Set material*

SOH	F	C	D	N	C	-	r	N	N	N	N	-	-	-	-	ETB

NNNN: indication of material
0 = Type 1
1 = Type 2
2 = Type 3
3 = Type 4
4 = Type 5
5 = Type 6
6 = Type 7
7 = Type 8

SPE 107/12, SPE 160/12	Type 1-3
SPE 104/8, SPE 106/12, SPE 108/12, SPE 162/12	Type 1-8
Spectra 107/12, Spectra 160/12	Type 1-3
Spectra 108/12, Spectra 162/12	Type 1-8

Enquire material

SOH	F	C	D	N	C	-	w	p	p	p	p	p	p	p	p	ETB

Answer

SOH	A	N	N	N	N	-	-	-	-	p	p	p	p	p	p	p	p	ETB

Set scan position

SOH	F	C	D	E	A	-	r	N	N	-	-	-	-	-	-	ETB

NN = indication of scan position in % of the set label length (01 … 99)
This value depends on the label length.

Enquire scan position

SOH	F	C	D	E	A	-	w	p	p	p	p	p	p	p	p	ETB

Answer

SOH	A	N	N	-	-	-	-	-	-	p	p	p	p	p	p	p	p	ETB

* not Spectra 216/12

Label photocell

Enquire minimal measured level at label photocell

SOH	F	C	M	A	A	-	w	p	p	p	p	p	p	p	p	ETB

Answer

SOH	A	N	N	N	-	-	-	-	-	p	p	p	p	p	p	p	p	ETB

NNN: value of measured level, 3 digit ASCII number in 1/100 V

Enquire maximum measured level at label photocell

SOH	F	C	M	A	B	-	w	p	p	p	p	p	p	p	p	ETB

Answer

SOH	A	N	N	N	-	-	-	-	-	p	p	p	p	p	p	p	p	ETB

NNN: value of measured level, 3 digit ASCII number in 1/100 V

Set switching threshold of label photocell

SOH	F	C	M	A	C	-	r	N	N	N	-	-	-	-	-	ETB

NNN: value of switching threshold, 3 digit ASCII number in 1/100 V
This value is automatically calculated at measuring process at printer $(min+(\frac{max-min}{3})$

Enquire switching threshold

SOH	F	C	M	A	C	-	w	p	p	p	p	p	p	p	p	ETB

Answer

SOH	A	N	N	N	-	-	-	-	-	p	p	p	p	p	p	p	p	ETB

NNN: value at measured switching threshold, 3 digit ASCII number in 1/100 V

Enquire current value at transer ribbon photocell

SOH	F	C	M	B	A	-	w	p	p	p	p	p	p	p	p	ETB

Answer

SOH	A	N	-	-	-	-	-	-	-	p	p	p	p	p	p	p	p	ETB

N = 0 – no transfer ribbon inserted
N = 1 – transfer ribbon inserted

Enquire current value at set label photocell

SOH	F	C	M	B	B	-	w	p	p	p	p	p	p	p	p	ETB

Answer

SOH	A	N	N	N	-	-	-	-	-	p	p	p	p	p	p	p	p	ETB

NNN: value at label photocell, 3 digit ASCII number in 1/100 V

Dispenser photocell

Enquire condition of dispenser photocell

SOH	F	C	M	B	E	A	w	p	p	p	p	p	p	p	p	ETB

Answer

SOH	A	N	-	-	-	-	-	-	-	p	p	p	p	p	p	p	p	ETB

N = 0 – no label is at photocell
N = 1 – label is at photocell
The set switching threshold of dispenser photocell is taken into consideration.

Printer settings

Set print speed

SOH	F	C	A	A	-	-	r	N	N	N	-	-	-	-	-	ETB

NNN: Indication of print speed in mm/s
It is necessary to transmit a 3 digit ASCII number

Spectra 107/12, Spectra 108/12 = 050 … 300
Spectra 162/12 = 050 … 150
Spectra 216/12 = 050 … 100

SPE 104/8, SPE 106/12,
SPE 160/12 = 050 … 200
SPE 107/12, SPE 108/12 = 050 … 300
SPE 162/12 = 050 … 150

Enquire speed

SOH	F	C	A	A	-	-	w	p	p	p	p	p	p	p	p	ETB

Answer

SOH	A	N	N	N	-	-	-	-	-	p	p	p	p	p	p	p	p	ETB

Set transfer ribbon control On/Off

SOH	F	C	D	B	-	-	r	N	M	-	-	-	-	-	-	ETB

N = 1 – transfer ribbon control Off
N = 0 – transfer ribbon control On
M = 0 – weak sensibility*
M = 1 – strong sensibility*

Enquire transfer ribbon control On/Off

SOH	F	C	D	B	-	-	w	p	p	p	p	p	p	p	p	ETB

Answer

SOH	A	N	M	-	-	-	-	-	-	p	p	p	p	p	p	p	p	ETB

Set ribbon save On/Off*

SOH	F	C	D	J	-	-	r	N	-	-	-	-	-	-	-	ETB

N = 0 – Off
N = 1 – On

Enquire ribbon save On/Off

SOH	F	C	D	J	-	-	w	p	p	p	p	p	p	p	p	ETB

Answer

SOH	A	N	-	-	-	-	-	-	-	p	p	p	p	p	p	p	p	ETB

* option

Set field handling

SOH	F	C	D	K	-	-	r	N	-	-	-	-	-	-	-	ETB

N = 0 – field handling Off
N = 1 – graphic received
N = 2 – delete graphic

Enquire field handling

SOH	F	C	D	K	-	-	w	p	p	p	p	p	p	p	p	ETB

Answer

SOH	A	N	-	-	-	-	-	-	-	p	p	p	p	p	p	p	p	ETB

Set printer language

SOH	F	C	D	I	-	-	r	N	-	-	-	-	-	-	-	ETB

N = 0 – German
N = 1 – English
N = 2 – French
N = 3 – Spanish
N = 4 – Finnish
N = 5 – not used
N = 6 – Portuguese
N = 7 – Netherlands
N = 8 – Italian
N = 9 – Danish
N = 10 – Polish

Enquire printer language

SOH	F	C	D	I	-	-	w	p	p	p	p	p	p	p	p	ETB

Answer

SOH	A	N	-	-	-	-	-	-	-	p	p	p	p	p	p	p	p	ETB

Set external printer parameter

SOH	F	C	C	P	-	-	r	N	-	-	-	-	-	-	-	ETB

N: 0 = only parameter settings by interface for label length, gap length and label width are taken into consideration.
1 = parameter settings by interface are processed
2 = parameter settings by interface are not taken into consideration

Enquire external printer parameter

SOH	F	C	C	P	-	-	w	p	p	p	p	p	p	p	p	ETB

Answer

SOH	A	N	-	-	-	-	-	-	-	p	p	p	p	p	p	p	p	ETB

Set Codepage

SOH	F	C	C	N	-	-	r	N	-	-	-	-	-	-	-	ETB

N = 0 - ANSI
N = 1 - Codepage 437 (english)
N = 2 - Codepage 850
N = 3 - GEM German
N = 4 - GEM English
N = 5 - GEM French
N = 6 - GEM Swedish
N = 7 - GEM Danish
N = 8 - Codepage 437 (Greek)
N = 9 - Codepage 852 (Eastern European)
N = 10 - Codepage 857 (Turkish)

Enquire Codepage

SOH	F	C	C	N	-	-	w	p	p	p	p	p	p	p	p	ETB

Answer

SOH	A	N	-	-	-	-	-	-	-	p	p	p	p	p	p	p	p	ETB

Set user guiding

SOH	F	C	D	U	-	-	r	N	-	-	-	-	-	-	-	ETB

N = 0 - Off, no entries are possible but pre-set values are printed
N = 1 - On, the user has to enter a value for each variable or to confirm the pre-set values by pressing the enter key. This default value is set each time the printer is switched on
N = 2 - Auto, the entries for a label are repeated after each print and the last entered values are the new pre-set values

Enquire user guiding

SOH	F	C	D	U	-	-	w	p	p	p	p	p	p	p	p	ETB

Answer

SOH	A	N	-	-	-	-	-	-	-	p	p	p	p	p	p	p	p	ETB

Set keyboard layout

SOH	F	C	C	K	-	-	r	N	-	-	-	-	-	-	-	ETB

N = 0 – German keyboard
N = 1 – English keyboard
N = 2 – French keyboard
N = 3 – Greek keyboard
N = 4 – Spanish keyboard
N = 5 – Swedish keyboard
N = 6 – Czech keyboard

Enquire keyboard layout

SOH	F	C	C	K	-	-	w	p	p	p	p	p	p	p	p	ETB

Answer

SOH	A	N	-	-	-	-	-	-	-	p	p	p	p	p	p	p	p	ETB

Set sound level of key click (buzzer)

SOH	F	C	C	B	-	-	r	N	-	-	-	-	-	-	-	ETB

N = ‘0‘ – Buzzer Off
N = ‘1-7‘ – Sound level of key click

Enquire sound level of key click (buzzer)

SOH	F	C	C	B	-	-	w	p	p	p	p	p	p	p	p	ETB

Answer

SOH	A	N	-	-	-	-	-	-	-	p	p	p	p	p	p	p	p	ETB

Set brightness of display

SOH	F	C	C	B	A	-	r	N	-	-	-	-	-	-	-	ETB

N = value range of display brightness 0 - 7

Enquire brightness of display

SOH	F	C	C	B	A	-	w	p	p	p	p	p	p	p	p	ETB

Answer

SOH	A	N	-	-	-	-	-	-	-	p	p	p	p	p	p	p	p	ETB

Set hotstart On/Off

SOH	F	C	D	W	-	-	r	N	-	-	-	-	-	-	-	ETB

N = ‘0‘ – hotstart Off
N = ‘1‘ – hotstart On

Enquire hotstart On/Off

SOH	F	C	D	W	-	-	w	p	p	p	p	p	p	p	p	ETB

Answer

SOH	A	N	-	-	-	-	-	-	-	p	p	p	p	p	p	p	p	ETB

Set autoload

SOH	F	C	D	X	-	-	r	N	-	-	-	-	-	-	-	ETB

N = 0 – Off
N = 1 – On

Enquire autoload

SOH	F	C	D	X	-	-	w	p	p	p	p	p	p	p	p	ETB

Answer

SOH	A	N	-	-	-	-	-	-	-	p	p	p	p	p	p	p	p	ETB

Set default label On/Off

SOH	F	C	M	K	E	-	r	N	-	-	-	-	-	-	-	ETB

N = '0' – Off: Print start without label definition signalises error.
N = '1' – On: Default label is printed without label definition.
Default: Off

Enquire default label On/Off

SOH	F	C	M	K	E	-	w	p	p	p	p	p	p	p	p	ETB

Answer

SOH	A	N	-	-	-	-	-	-	-	p	p	p	p	p	p	p	p	ETB

Set operating mode backfeed

SOH	F	C	M	R	A	-	r	N	-	-	-	-	-	-	-	ETB

N = ‘0‘ – standard
N = ‘1‘ – automatic
N = ‘2‘ – no backfeed
N = ‘3‘ – optimised

Enquire operating mode backfeed

SOH	F	C	M	R	A	-	w	p	p	p	p	p	p	p	p	ETB

Answer

SOH	A	N	-	-	-	-	-	-	-	p	p	p	p	p	p	p	p	ETB

Set backfeed delay

SOH	F	C	M	R	B	-	r	N	N	N	-	-	-	-	-	ETB

NNN: indication of delay time, 3 digit ASCII number in 1/100s

Enquire backfeed delay

SOH	F	C	M	R	B	-	w	p	p	p	p	p	p	p	p	ETB

Answer

SOH	A	N	N	N	-	-	-	-	-	p	p	p	p	p	p	p	p	ETB

Set label change confirmation

SOH	F	C	S	D	F	C	r	N	-	-	-	-	-	-	-	ETB

N = ‘0‘ – Confirmation Off
N = ‘1‘ – Confirmation On

Enquire label change confirmation

SOH	F	C	S	D	F	C	w	p	p	p	p	p	p	p	p	ETB

Answer

SOH	A	N	-	-	-	-	-	-	-	p	p	p	p	p	p	p	p	ETB

Interface

You can set the parameter of the serial interface by the following commands but you have to note that after sending one of the commands also the host computer changes the corresponding parameter of its interface to allow further communications Host computer – printer.

For all interface commands the interface is fixed with x. Allowed are the following values:
x = 1 ⇒ COM 1
x = 2 ⇒ COM 2

In all other cases automatically the first serial interface is addressed.
In the answers the addressed interface is also returned.

Set all interface parameter

SOH	F	C	F	F	x	-	r	m	;	b	;	p	;	d	;	s	ETB

m = mode (0 = Off, 1 = On, 2 = On, without error message)
b = Baudrate (2400, 4800, 9600, 19200, 38400, 57600)
p = parity (n = no parity, e = even parity, o = odd parity)
d = number of data bits (7, 8)
s = number of stop bits (1, 2)

Enquire all interface parameter

SOH	F	C	F	F	x	-	w	p	p	p	p	p	p	p	p	ETB

Answer

SOH	A	x	;	m	;	b	;	p	;	d	;	s	;	p	p	p	p	p	p	p	p	ETB

Example: activate interface COM1 and set 9600 Baud, no parity, 8 data bits, 2 stop bits
[SOH]FCFF1-r1;9600;n;8;2[ETB]

Interface protocol

There are two different interface protocols available. Usually SOH = 01_{Hex} and ETB = 17_{Hex}. However there are host computers (e.g. AS/400), which cannot work with these characters. Therefore you can switch SOH = $5E_{Hex}$ and ETB = $5F_{Hex}$. The host computer has to change the corresponding parameter as well.

Set SOH and ETB

SOH	F	C	G	C	-	-	r	N	-	-	-	-	-	-	-	ETB

N = 0 - SOH = 01_{Hex}, ETB = 17_{Hex}
N = 1 - SOH = $5E_{Hex}$, ETB = $5F_{Hex}$

Enquire SOH and ETB

SOH	F	C	G	C	-	-	w	p	p	p	p	p	p	p	p	ETB

Answer

SOH	A	N	-	-	-	-	-	-	-	p	p	p	p	p	p	p	p	ETB

Data memory

Set data memory

SOH	F	C	G	D	-	-	r	M	-	-	-	-	-	-	-	ETB

M = 0 Off, after receiving FBCA0r or FBDA0r the interface is locked until the end of the print order, i.e. you cannot write more data in the receiving buffer.

M = 1 Standard, after starting a print order no data of the receiving buffer are processed but it is possible to write more data in the receiving buffer until it is full.

M = 2 Extended, after starting a print order it is possible to write more data in the receiving buffer. These data is processed during the print and the next label is prepared.

Enquire data memory

SOH	F	C	G	D	-	-	w	p	p	p	p	p	p	p	p	ETB

Answer

SOH	A	M	-	-	-	-	-	-	-	p	p	p	p	p	p	p	p	ETB

Set reaction to unknown interrogative set

SOH	F	C	G	E	A	-	r	N	-	-	-	-	-	-	-	ETB

N – Indication of value between 0 and 3

Enquire reaction to unknown interrogative set

SOH	F	C	G	E	A	-	w	p	p	p	p	p	p	p	p	ETB

Answer

SOH	A	N	-	-	-	-	-	-	-	p	p	p	p	p	p	p	p	ETB

Offset values

Set Y offset

SOH	F	C	C	D	-	-	r	V	N	N	N	-	-	-	-	ETB

V: pre-sign of offset (+ or −)
NNN: offset value, 3 digit ASCII number in 1/10 mm

Enquire Y offset

SOH	F	C	C	D	-	-	w	p	p	p	p	p	p	p	p	ETB

Answer

SOH	A	V	N	N	N	-	-	-	-	p	p	p	p	p	p	p	p	ETB

Set X offset

SOH	F	C	C	E	-	-	r	V	N	N	N	-	-	-	-	ETB

V: pre-sign of offset (+ or −)
NNN: offset value, 3 digit ASCII number in 1/10 mm

Enquire X offset

SOH	F	C	C	E	-	-	w	p	p	p	p	p	p	p	p	ETB

Answer

SOH	A	V	N	N	N	-	-	-	-	p	p	p	p	p	p	p	p	ETB

Set tear off offset

SOH	F	C	C	G	-	-	r	V	N	N	N	-	-	-	-	ETB

V: pre-sign of offset (always +)
NNN: offset value, 3 digit ASCII number in 1/10 mm

Enquire tear off offset

SOH	F	C	C	G	-	-	w	p	p	p	p	p	p	p	p	ETB

Answer

SOH	A	V	N	N	N	-	-	-	-	p	p	p	p	p	p	p	p	ETB

Set cutter offset*

SOH	F	C	S	C	A	-	r	V	N	N	N	-	-	-	-	ETB

V: pre-sign of offset (always +)
NNN: offset value, 3 digit ASCII number in 1/10 mm

Enquire cutter offset

SOH	F	C	S	C	A	-	w	p	p	p	p	p	p	p	p	ETB

Answer

SOH	A	V	N	N	N	-	-	-	-	p	p	p	p	p	p	p	-	ETB

Set dispenser offset

SOH	F	C	S	D	A	-	r	V	N	N	N	-	-	-	-	ETB

V: pre-sign of offset (always +)
NNN: offset value, 3 digit ASCII number in 1/10 mm

Enquire dispenser offset

SOH	F	C	S	D	A	-	w	p	p	p	p	p	p	p	p	ETB

Answer

SOH	A	V	N	N	N	-	-	-	-	p	p	p	p	p	p	p	p	ETB

* only Spectra

Service functions

Set Online / Offline

SOH	F	C	M	K	C	-	r	M	-	-	-	-	-	-	-	ETB

M = 0 – Online/Offline Off
M = 1 – Online/Offline On

Enquire Online/Offline

SOH	F	C	M	K	C	-	w	p	p	p	p	p	p	p	p	ETB

Answer

SOH	A	M	-	-	-	-	-	-	-	p	p	p	p	p	p	p	p	ETB

After changing by interface the display is automatically new initialised (by activated online/offline changing to online indication).

Set reprint action

SOH	F	C	M	K	D	-	r	N	-	-	-	-	-	-	-	ETB

Enquire reprint action

SOH	F	C	M	K	D	-	w	p	p	p	p	p	p	p	p	ETB

N = 0: Reprint complete
N = 1: Reprint is blank

Answer

SOH	A	N	-	-	-	-	-	-	-	p	p	p	p	p	p	p	p	ETB

Set winder output

SOH	F	C	M	P	-	-	r	N	-	-	-	-	-	-	-	ETB

N = 0: Off
N = 1: On

Enquire winder output

SOH	F	C	M	P	-	-	w	p	p	p	p	p	p	p	p	ETB

Answer

SOH	A	N	-	-	-	-	-	-	-	p	p	p	p	p	p	p	p	ETB

Close printhead

SOH	F	C	M	B	C	-	r	N	-	-	-	-	-	-	-	ETB

N = 1 – printhead down (closed)

Enquire condition of printhead photocell

SOH	F	C	M	B	C	-	w	p	p	p	p	p	p	p	p	ETB

Answer

SOH	A	N	-	-	-	-	-	-	-	p	p	p	p	p	p	p	p	ETB

N = 0: printhead is open
N = 1: printhead is closed

Open printhead

SOH	F	C	M	B	D	-	r	N	-	-	-	-	-	-	-	ETB

N = 1 – printhead up (open)

Enquire condition of printhead

SOH	F	C	M	B	C	-	w	p	p	p	p	p	p	p	p	ETB

Answet

SOH	A	N	-	-	-	-	-	-	-	p	p	p	p	p	p	p	p	ETB

N = 0: printhead is open
N = 1: printhead is down

Enquire condition of printhead lockbar

SOH	F	C	M	C	A	-	w	p	p	p	p	p	p	p	p	ETB

Answer

SOH	A	N	-	-	-	-	-	-	-	p	p	p	p	p	p	p	p	ETB

N = 0: lockbar open
N = 1: lockbar closed

Enquire printhead temperature

SOH	F	C	M	C	-	-	w	p	p	p	p	p	p	p	p	ETB

Answet

SOH	A	N	-	-	-	-	-	-	-	p	p	p	p	p	p	p	p	ETB

NNN: value of printhead temperature, 3 digit ASCII number in degree

Set diameter for transfer ribbon prior warning

SOH	F	C	M	L	B	-	r	N	N	N	-	-	-	-	-	ETB

NNN = 030 … 090 diameter in mm

Enquire diameter for transfer ribbon prior warning

SOH	F	C	M	L	B	-	w	p	p	p	p	p	p	p	p	ETB

Answer

SOH	A	N	-	-	-	-	-	-	-	p	p	p	p	p	p	p	p	ETB

Set transfer ribbon prior warning

SOH	F	C	M	L	A	-	r	N	-	-	-	-	-	-	-	ETB

N = 0: Off
N = 1: On

Enquire transfer ribbon prior warning

SOH	F	C	M	L	A	-	w	p	p	p	p	p	p	p	p	ETB

Answer

SOH	A	N	-	-	-	-	-	-	-	p	p	p	p	p	p	p	p	ETB

Readout the current transfer ribbon diameter

SOH	F	C	M	L	C	-	w	-	-	-	-	-	-	-	-	ETB

Answer

SOH	A	N	N	N	-	-	-	-	-	p	p	p	p	p	p	p	p	ETB

Set mode for transfer ribbon prior warning

SOH	F	C	M	L	D	A	r	N	-	-	-	-	-	-	-	ETB

N = 0: warning
N = 1: reduced speed
N = 2: error

Enquire mode for transfer ribbon prior warning

SOH	F	C	M	L	D	-	w	p	p	p	p	p	p	p	p	ETB

Answer

SOH	A	N	N	N	-	-	-	-	-	p	p	p	p	p	p	p	p	ETB

Set reduced print speed (transfer ribbon prior warning)

SOH	F	C	M	L	D	B	r	N	N	N	-	-	-	-	-	ETB

N = V_{min} … V_{max}: reduced print speed (depending on printer type)

Spectra 107/12, Spectra 108/12 = 050 … 300
Spectra 162/12 = 050 … 150
Spectra 216/12 0 050 … 100

SPE 104/8, SPE 106/12, SPE 160/12 = 050 … 200
SPE 107/12, SPE 108/12 = 050 … 300
SPE 162/12 = 050 … 150

Enquire reduced print speed (transfer ribbon prior warning)

SOH	F	C	M	L	D	B	w	p	p	p	p	p	p	p	p	ETB

Answer

SOH	A	N	N	N	-	-	-	-	-	p	p	p	p	p	p	p	p	ETB

Set printhead resistance

SOH	F	C	M	G	-	-	r	N	N	N	N	N	-	-	-	ETB

NNNNN = Indication of resistance value in Ohm.

Enquire printhead resistance

SOH	F	C	M	G	-	-	w	p	p	p	p	p	p	p	p	ETB

Answer

SOH	A	N	N	N	N	N	-	-	-	p	p	p	p	p	p	p	p	ETB

Mileage (kilometre) counter
It is only possible to enquire the kilometre values of printer and printhead by interface and not to set them to 0.

Enquire printer's mileage

SOH	F	C	H	A	-	-	w	p	p	p	p	p	p	p	p	ETB

Answer

SOH	A	N	N	N	N	N	N	N	N	p	p	p	p	p	p	p	p	ETB

Enquire printhead's mileage

SOH	F	C	H	B	-	-	w	p	p	p	p	p	p	p	p	ETB

Answer

SOH	A	N	N	N	N	N	N	N	N	p	p	p	p	p	p	p	p	ETB

NNNNNNNN = Indication of mileage of printer res. printhead in meters (e.g. '00000123' = 123 m)

Date & Time

Set date

SOH	F	C	I	A	-	-	r	D	D	M	O	Y	Y	D	W	ETB

DD = day of month
MO = month
YY = year
DW = day of week ('00' = Sunday)

Enquire date

SOH	F	C	I	A	-	-	w	p	p	p	p	p	p	p	p	ETB

Answer

SOH	A	D	D	M	O	Y	Y	D	W	p	p	p	p	p	p	p	p	ETB

Set time

SOH	F	C	I	B	-	-	r	H	H	M	I	S	S	A	M	ETB

HH = hours
MI = minutes
SS = seconds
AM = mode ('am' = 12 hours mode AM, 'pm' = 12 hours mode PM, '—' = 24 hours mode)

Enquire time

SOH	F	C	I	B	-	-	w	p	p	p	p	p	p	p	p	ETB

Answer

SOH	A	H	H	M	I	S	S	A	M	p	p	p	p	p	p	p	p	ETB

Automatically adjust clock for daylight saving changes

Because of the fact that there is no world-wide regulation if and when a changing of time between summer and wintertime (normal time) in the individual countries takes place, we distinguish between the following four formats for the definition for beginning and end of summertime.

F 0:	european format start of summertime = last Sunday in March end of summertime = last Sunday in October **W:** week (1 = first, …, 5 = last) **WD:** day of week (0 = Sunday, …, 6 = Saturday) **MM:** month (01 = January, …, 12 = December)
F 1:	fix date with indication of year **DD:** day **MM:** month (01 = January, …, 12 = December) **YY:** year
F 2:	fix date without indication of year **DD:** day **MM:** month (01 = January, …, 12 = December)
F 3:	week day after day in month **WD:** day of week (0 = Sunday, …, 6 = Saturday) **DD:** after day (only the first day is taken into consideration) **MM:** month (01 = January, …, 12 = December)

Set automatically adjust clock for daylight saving changes

SOH	F	C	I	G	-	-	r	N	-	-	-	-	-	-	-	ETB

Enquire automatically adjust clock for daylight saving changes

SOH	F	C	I	G	-	-	w	p	p	p	p	p	p	p	p	ETB

Answer

SOH	A	N	-	-	-	-	-	-	-	p	p	p	p	p	p	p	p	ETB

N = 0 – Automatically adjust clock for daylight saving changes Off
N = 1 – Automatically adjust clock for daylight saving changes On

Set beginning of summertime

F 0:

SOH	F	C	I	H	-	-	r	F	W	;	WD	;	M	M	;	H	H	;	M	M	ETB

F 1:

SOH	F	C	I	H	-	-	r	F	D	D	;	M	M	;	Y	Y	;	H	H	;	M	M	ETB

F 2:

SOH	F	C	I	H	-	-	r	F	D	D	;	M	M	;	H	H	;	M	M	ETB

F 3:

SOH	F	C	I	H	-	-	r	F	WD	;	D	D	;	M	M	;	H	H	;	M	M	ETB

Enquire beginning of summertime

SOH	F	C	I	H	-	-	w	p	p	p	p	p	p	p	p	ETB

Answer

SOH	A	F	W	W	D	M	M	p	p	p	p	p	p	p	p	ETB

The answer depends on each set format.

Set end of summertime

F 0:

SOH	F	C	I	I	-	-	r	F	W	;	WD	;	M	M	;	H	H	;	M	M	ETB

F 1:

SOH	F	C	I	I	-	-	r	F	D	D	;	M	M	;	Y	Y	;	H	H	;	M	M	ETB

F 2:

SOH	F	C	I	I	-	-	r	F	D	D	;	M	M	;	H	H	;	M	M	ETB

F 3:

SOH	F	C	I	I	-	-	r	F	WD	;	D	D	;	M	M	;	H	H	;	M	M	ETB

Enquire end of summertime

SOH	F	C	I	I	-	-	w	p	p	p	p	p	p	p	p	ETB

Answer

SOH	A	F	W	W	D	M	M	p	p	p	p	p	p	p	p	ETB

The answer depends on each set format.

Set time shifting

SOH	F	C	I	J	-	-	r	N	N	N	-	-	-	-	-	ETB

NNN = minutes

Enquire time shifting

SOH	F	C	I	J	-	-	w	p	p	p	p	p	p	p	p	ETB

Answer

SOH	A	N	N	N	p	p	p	p	p	p	p	p	ETB

Password

Set password

SOH	F	C	K	A	-	-	r	N	N	N	N	-	-	-	-	ETB

NNN: Indication of password, 4 digit ASCII number in mm (0000 … 9999)

Enquire password

SOH	F	C	K	A	-	-	w	p	p	p	p	p	p	p	p	ETB

Answer

SOH	A	N	N	N	N	-	-	-	-	p	p	p	p	p	p	p	p	ETB

Set function group

SOH	F	C	K	B	-	-	r	A	B	C	D	E	-	-	-	ETB

A - Function menu
- 0 = password Off
- 1 = password On

B - Memory card
- 0 = password off
- 1 = standard directory allowed
- 2 = password On

C – not assiegned

D - Print module guiding
- 0 = password Off
- 1 = not assigned
- 2 = password On

E – Favorites menu
- 0 = password Off
- 1 = password On

Enquire function group

SOH	F	C	K	B	-	-	w	p	p	p	p	p	p	p	p	ETB

Answer

SOH	A	a	b	c	d	e	-	-	-	p	p	p	p	p	p	p	p	ETB

Set password function menu

SOH	F	C	K	D	A	-	r	N	N	N	N	-	-	-	-	ETB

NNNN = input of password
4 digit ASCII number in mm (0000 … 9999)

Enquire password function menu

SOH	F	C	K	D	A	-	w	p	p	p	p	p	p	p	p	ETB

Answer

SOH	A	N	N	N	N	-	-	-	-	p	p	p	p	p	p	p	p	ETB

Set password favorites menu

SOH	F	C	K	D	B	-	r	N	N	N	N	-	-	-	-	ETB

NNNN = input of password
4 digit ASCII number in mm (0000 … 9999)

Enquiere password favorites menu

SOH	F	C	K	D	B	-	w	p	p	p	p	p	p	p	p	ETB

Answer

SOH	A	N	N	N	N	-	-	-	-	p	p	p	p	p	p	p	p	ETB

Set password memory card

SOH	F	C	K	D	C	-	r	N	N	N	N	-	-	-	-	ETB

NNNN = input of password
4 digit ASCII number in mm (0000 … 9999)

Enquire password memory card

SOH	F	C	K	D	C	-	w	p	p	p	p	p	p	p	p	ETB

Answer

SOH	A	N	N	N	N	-	-	-	-	p	p	p	p	p	p	p	p	ETB

Set password printing manually

SOH	F	C	K	D	D	-	r	N	N	N	N	-	-	-	-	ETB

NNNN = input of password
4 digit ASCII number in mm (0000 … 9999)

Enquire printing manually

SOH	F	C	K	D	D	-	w	p	p	p	p	p	p	p	p	ETB

Answer

SOH	A	N	N	N	N	-	-	-	-	p	p	p	p	p	p	p	p	ETB

Print

Set line number of label (n digits)

SOH	F	B	A	A	-	-	r	N	ETB

N: Indication of line number in ASCII (1, 10, 100, …)

Enquire line number of label

SOH	F	B	A	A	-	-	w	p	p	p	p	p	p	p	p	ETB

Answer

SOH	A	N	-	-	-	-	-	-	-	p	p	p	p	p	p	p	p	ETB

Start /Stop command

In addition to the actual start/stop command, the print order can also be interrupted via the parameter/remote record.

SOH	F	D	-	-	-	-	r	N	-	-	-	-	-	-	-	ETB

N = '0' – interrupt printing
N = '1' – continue printing
N = '2' – cancel print order, when it is already stopped

Reset error

Reset error

SOH	F	C	M	H	-	-	r	N	N	N	N	-	-	-	-	ETB

NNNN = Indication of current error ID or '9999"

Enquire error

SOH	F	C	M	H	-	-	w	p	p	p	p	p	p	p	p	ETB

Answer

SOH	A	N	N	N	N	0	0	0	0	p	p	p	p	p	p	p	p	ETB

Readout error ID and error text

SOH	F	C	M	H	A	-	w	p	p	p	p	p	p	p	p	ETB

Answer

SOH	A	N	N	N	N	;	error text	;	p	p	p	p	p	p	p	p	ETB

Item number of print order

By means of this command the Host computer can enquire following item numbers:

Complete numbe of current print order

SOH	F	B	B	A	-	-	w	p	p	p	p	p	p	p	p	ETB

Number of labels which are still to print

SOH	F	B	B	B	-	-	w	p	p	p	p	p	p	p	p	ETB

Number of labels which are already printed

SOH	F	B	B	C	-	-	w	p	p	p	p	p	p	p	p	ETB

Interval in cutter mode

SOH	F	B	B	D	-	-	w	p	p	p	p	p	p	p	p	ETB

At the end of one of these commands the printer returns the corresponding number as ASCII value (4 res. 5 digits) in the answer set.

Answer

SOH	A	N	N	N	N	-	-	-	-	p	p	p	p	p	p	p	p	ETB

With this set it is also possible to transmit the item number of print order and the interval (in cutter mode) to the printer.

Item number of print order

SOH	F	B	B	A	-	-	r	N	N	N	N	N	-	-	-	ETB

NNNNN: 5 digits item number of order

Interval in cutter mode

SOH	F	B	B	D	-	-	r	N	N	N	N	-	-	-	-	ETB

NNNNN: Interval

Start printing

SOH	F	B	C	-	-	-	r	-	-	-	-	-	-	-	-	ETB

This command starts the print order which is actually set in the printer. The current parameter such as print mode, speed, initialisation etc. are used.

S = x: sorted (e.g. pages 1-5, then again 1-5 etc. are printed)
S = 1: unsorted (page 1 is printed x times, then page 2 x times, etc.)

SOH	F	B	D	-	-	-	r	-	-	-	-	-	-	-	-	ETB

Start printing (see above) but without tear off offset.

SOH	F	B	E	-	-	-	r	n	n	n	n	n	n	n	n	ETB

With this command the printjob identifier which appears in "printing" res. "stopped" window is assigned to a print order. In case that only blanks are transmitted, then the printjob identifier is deleted and the display shows "noname".

Initialisation of page handling

SOH	F	B	F	-	-	-	r	ETB

Selection of current page

SOH	F	B	G	-	-	-	r	N	ETB

N: current page number (1…10)

Select order of pages which are to print

SOH	F	B	H	-	-	-	r	P_1	P_2	P_3	ETB

P_1; P_2;…= pages which are to print

Generation of page without print start

SOH	F	B	I	-	-	-	r	S	ETB

With this command the corresponding page is only generated, i.e. no print start signal is sent.
S = x: sorted (printed are e.g. pages 1-5, then again 1-5 etc.)
S = 1: unsorted (printed are x times page 1, then x times page 2, etc.)

Feed

Release a label feed

SOH	F	E	-	-	-	-	r	-	-	-	-	-	-	-	ETB

Test print

Release a test print

SOH	F	F	-	-	-	-	r	-	-	-	-	-	-	-	ETB

Status print

Parameter set in order to print status report

SOH	F	C	M	Q	-	-	r	N	-	-	-	-	-	-	ETB

N = 0: Printer settings
N = 1: Bar codes
N = 2: Fonts

Cancel print orders

Cancel all active print orders

SOH	F	G	A	-	-	-	r	N	-	-	-	-	-	-	ETB

N = -: Cancel active print orders and delete all label data
N = 1: Cancel active print orders and receive label data

With the execution of this command:

- possible upcoming errors are confirmed
- possible upcoming customised entries are cancelled

Emulation

Set emulation

SOH	F	Z	-	-	-	-	r	N	-	-	-	-	-	-	ETB

N = 0 – CVPL (Carl Valentin Programming Language)
N = 1 – ZPL II® (Zebra Programming Language)

Enquire emulation

SOH	F	Z	-	-	-	-	w	p	p	p	p	p	p	p	ETB

Answer

SOH	A	N	-	-	-	-	-	-	-	p	p	p	p	p	p	p	p	ETB

PARAMETER SETS FOR OPTIONS

Network

Sets for option Ethernet

General

SOH	F	C	L	A	-	-	r	C	0	A	8	0	0	1	5	ETB

All network parameter sets start in the third column with a 'L'. Column 4 shows the identification for the corresponding network parameter. Column 5 can show another sub-identification.

Because of the fact that the argument size is limited to 8 characters, the IP addresses (IP address, network mask, gateway address) which consist of 32 bit are transmitted in HEX presentation.
For all data which is transmitted in HEX presentation (also the MAC address) it is allowed to use capital as well as small letters.

In contrary to the parameter settings of the other interfaces, the settings of the following sets were saved immediately onto Flash, i.e. it is not necessary to save the currently set configuration before switching off the printer so the modifications are still available after switching on.

So that the made modifications become active, also without printer Reset it is necessary to transmit a corresponding Z set which effects a Reset of the network devices.

Set IP address (e.g. 192.168.0.21)

SOH	F	C	L	A	-	-	r	C	0	A	8	0	0	1	5	ETB

Enquire IP address

SOH	F	C	L	A	-	-	w	p	p	p	p	p	p	p	p	ETB

Answer

SOH	A	C	0	A	8	0	0	1	5	p	p	p	p	p	p	p	p	ETB

Set netmask (e.g. 255.255.255.0)

SOH	F	C	L	B	-	-	r	F	F	F	F	F	F	0	0	ETB

Enquire netmask

SOH	F	C	L	B	-	-	w	F	F	F	F	F	F	0	0	ETB

Answer

SOH	A	F	F	F	F	F	F	0	0	p	p	p	p	p	p	p	p	ETB

Set Gateway address (e.g. 192.168.0.1)

SOH	F	C	L	C	-	-	r	C	0	A	8	0	0	0	1	ETB

Enquire Gateway address

SOH	F	C	L	C	-	-	w	p	p	p	p	p	p	p	p	ETB

Answer

SOH	A	C	0	A	8	0	0	0	1	p	p	p	p	p	p	p	p	ETB

Set transmission mode (e.g. auto recognition)

SOH	F	C	L	D	-	-	r	0	-	-	-	-	-	-	-	ETB

0 = auto recognition
1 = 10 MBit/s half duplex
2 = 10 MBit/s full duplex
3 = 100 MBit/s half duplex
4 = 100 MBit/s full duplex

Enquire transmission mode

SOH	F	C	L	D	-	-	w	0	-	-	-	-	-	-	-	ETB

Answer

SOH	A	0	-	-	-	-	-	-	-	p	p	p	p	p	p	p	p	ETB

Set support DHCP

SOH	F	C	L	E	-	-	r	N	ETB

N: 0 = Off
1 = On

Enquire support DHCP

SOH	F	C	L	E	-	-	w	p	p	p	p	p	p	p	p	ETB

Answer

SOH	A	N	-	-	-	-	-	-	-	p	p	p	p	p	p	p	p	ETB

Assign printer name

SOH	F	C	L	F	-	-	r	N	N	N	N	N	N	N	N	N	N	ETB
N: printer name is allowed to exist of max. 11 characters (A…Z, a…z, 0…9, -,)																		

Enquire printer name

SOH	F	C	L	F	-	-	w	p	p	p	p	p	p	p	p	ETB

Answer

SOH	A	N	N	N	N	N	N	N	;	p	p	p	p	p	p	p	p	ETB

Set MAC address (e.g. 00-07-4A-43-19-08)

SOH	F	C	L	M	B	-	r	0	0	0	7	4	A	-	-	ETB

SOH	F	C	L	M	A	-	r	4	3	1	9	0	8	-	-	ETB

SOH	F	C	L	M	C	-	r	0	0	0	7	4	A	1	9	0	8	ETB

A MAC address has a width of 48 bit and is normally indicated in hexadecimals.
With the B record our identifier of the MAC address can be changed. All our machines start with 00-07-4A as default. This corresponds to the Memory-Pool which the MAC address committee assigned to us to guarantee that the MAC address is world-wide manufacturer-spreading unique.
With the A record any address can be set in our pool.
With the C record any address in our pool and the identification of the MAC address can be set/changed at the same time.

Enquire MAC address

SOH	F	C	L	M	B	-	w	p	p	p	p	p	p	p	p	ETB

SOH	F	C	L	M	A	-	w	p	p	p	p	p	p	p	p	ETB

SOH	F	C	L	M	C	-	w	p	p	p	p	p	p	p	p	ETB

Answer

SOH	A	0	0	0	7	4	A	-	-	p	p	p	p	p	p	p	p	ETB

SOH	A	4	3	1	9	0	8	-	-	p	p	p	p	p	p	p	p	ETB

SOH	A	0	0	0	7	4	A	4	3	1	9	0	8	p	p	p	p	p	p	p	p	ETB

NTP Server

NTP (Network Time Protocol) is a standardized Internet protocol permitting the synchronization of real-time clocks of network participants. The printer connects itself with a time server and align every 60 minutes its internal real-time clock with that of the time server in order to correct possible differences.
The address of server (IP address) can be freely configured in the printer. The communication is effected by UDP and the fixed set port 123. The service in the printer is deactivated by transmitting the server address 0.0.0.0.
The time servers work together with the coordinated world time (UTC) and therefore an additional time shift is needed compared to the reference time. For Germany it is e.g. +1 hour.
The current state of the connexion can be queried with a status set.

Set NTP Server IP

SOH	F	C	L	N	I	-	r	N	ETB

N = X.X.X.X (X = 0 … 255)

Enquire NTP Server IP

SOH	F	C	L	N	I	-	w	p	p	p	p	p	p	p	p	ETB

Answer

SOH	A	N	N	N	N	N	N	N	N	p	p	p	p	p	p	p	p	ETB

0.0.0.0 deactivates the NTP service

Readout NTP status

SOH	F	C	L	N	S	-	w	p	p	p	p	p	p	p	p	ETB

Answer

SOH	A	N	-	-	-	-	-	-	-	p	p	p	p	p	p	p	p	ETB

N: 0 = Off
N: 1 = OK
N: 2 = Error

Set time zone (hour offset)

SOH	F	C	L	N	Z	-	r	N	ETB

N: -12, 12

Enquire time zone (hour offset)

SOH	F	C	L	N	Z	-	w	p	p	p	p	p	p	p	p	ETB

Answer

SOH	A	N	N	N	N	N	N	N	N	p	p	p	p	p	p	p	p	p	ETB

Reset network device

SOH	F	C	L	Z	-	-	r	--------	ETB

For this set is no enquiry possible. This set causes that modifications made by the transfer of the previous sets become effective.

Memory Card

NOTICE!

Printers from the series Spectra/SPE are equipped with 2 PCMCIA Memory Card drives. The left drive (front view) is called A and the right drive called B.

Save a layout onto memory card

SOH	F	M	A	O	-	-	r	P	ETB

O: In case a label with the entered name exists already then the label is overwritten without an enquiry. If you enter another value as 0, an enquiry appears demanding if you want to overwrite.
P: File name of the layout which is to save. Drive and path name are optional, i.e. the file name is allowed to have more than 8 characters but is limited to 79.

Load a file from memory card

SOH	F	M	B	-	-	-	r	P	ETB

P: File name of the label which is to load. Drive and path name are optional, i.e. the file name is allowed to have more than 8 characters but is limited to 79.

Delete a label from memory card

SOH	F	M	C	-	-	-	r	P	ETB

P: File name of the layout which is to delete. Drive and path name are optional, i.e. the file name is allowed to have more than 8 characters but is limited to 79.

Format memory card

SOH	F	M	D	-	-	-	r	P	ETB

P: Optional drive identification with colon (e.g. A:). In case no drive is indicated, then the currently selected is formatted.

Readout contents of memory card

SOH	F	M	G	-	-	-	r	P	ETB

P: Optional drive identification with colon (e.g. A:). Fin case no drive is indicated, then the currently selected is read out.

Answer

SOH	File name/directory name	ETB

A list of all file entries is indicated, each entry is included in (SOH) and (ETB).

Readout free memory space

SOH	F	M	H	-	-	-	w	X	p	p	p	p	p	p	p	p	ETB

X = Drive [A,B] (optional)

Answer

SOH	A	X	n	n	n	n	-	-	-	p	p	p	p	p	p	p	p	ETB

X = Drive [A,B]
n = Memory space in KB

Create directory

SOH	F	M	I	-	-	-	r	P	ETB

P = Drive and path indication

Delete directory

SOH	F	M	J	-	-	-	r	P	ETB

P = Drive and path indication

NOTICE!

The current directory cannot be deleted.

Delete directory path

SOH	F	M	J	A	-	-	r	P	ETB

Deletes the indicated directory including all containing sub-directories and files.

Change standard directory

SOH	F	M	K	-	-	-	r	P	ETB

P = Drive and path indication

Readout current directory

SOH	F	M	K	-	-	-	w	ETB

Answer

SOH	A	P	ETB

P = Current directory

Set standard directory for file selection via I/O

SOH	F	M	K	B	-	-	r	N	ETB

N = directory path

Enquire standard directory for file selection via I/O

SOH	F	M	K	B	-	-	w	p	p	p	p	p	p	p	p	ETB

Answer

SOH	A	N	-	-	-	-	-	-	-	p	p	p	p	p	p	p	p	ETB

Transfer file

SOH	F	M	L	-	-	-	w	P	ETB

P: File name of file which is to transfer. Drive name and path name are optional, i.e. the file name is allowed to have more than 8 characters but is limited to 79.

Answer

SOH	A	F	*	S	ETB	Data

F = File name
S = File size in Byte
Data = Binary data

Readout size of memory card

SOH	F	M	P	O	-	-	w	X	ETB

O: In case O is indicated, no error messages are displayed at the printing display e.g. if no card is inserted.
X: Drive [A,B] (optional)

Answer

SOH	A	D	n	n	n	n	-	-	-	X	ETB

X = Drive [A,B]
n = Memory in KB
D = enquired drive

Drive status

SOH	F	M	S	-	-	-	w	X	ETB

X - Drive [A,B]

Answer

SOH	A	X	S	ETB

X = Drive [A,B]
S = Status
0: no storage medium
1: not formatted
2: ready
3: not determinable

Cutter*

Set cutter mode

SOH	F	C	D	D	-	-	r	N	-	-	-	-	-	-	-	ETB

N = 0 – cutter mode Off
N = 1 – single cut
N = 2 – mode 1 (w/o cutter offset), print no. of pieces w. cut after each label w/o backfeed
N = 3 – mode 2 (w backfeed), print no. of pieces w. cut after each label w. backfeed
N = 4 – interval cut with final cut, transmit interval with later
N = 5 – interval cut without final cut, transmit interval width later
N = 6 – final cutt (cut after print end)

Enquire cutter mode

SOH	F	C	D	D	-	-	w	p	p	p	p	p	p	p	p	ETB

Answer

SOH	A	N	-	-	-	-	-	-	-	p	p	p	p	p	p	p	p	ETB

Set cutter offset

SOH	F	C	S	C	A	-	r	V	N	N	N	-	-	-	-	ETB

V: pre-sign of offset (always +)
NNN: offset value, 3 digit ASCII number in 1/10 mm

Enquire cutter offset

SOH	F	C	S	C	A	-	w	p	p	p	p	p	p	p	p	ETB

Answer

SOH	A	V	N	N	N	-	-	-	-	p	p	p	p	p	p	p	-	ETB

Set double cut

SOH	F	C	S	C	B	-	r	V	N	N	N	-	-	-	-	ETB

V: pre-sign of offset (always +)
NNN: offset value, 3 digit ASCII number in 1/10 mm
0 = no double cut

Enquire double cut

SOH	F	C	S	C	B	-	w	p	p	p	p	p	p	p	p	ETB

Answer

SOH	A	V	N	N	N	-	-	-	-	p	p	p	p	p	p	p	-	ETB

* only Spectra

Set cut width

SOH	F	C	S	C	C	-	r	N	N	N	-	-	-	-	-	ETB

NNN: cut width of cutter in mm
minimum value: 20 mm
step width: 20 mm
maximum value: printhead width + 20 mm

Enquire cut width

SOH	F	C	S	C	C	-	w	p	p	p	p	p	p	p	p	ETB

Answer

SOH	A	N	N	N	-	-	-	-	-	p	p	p	p	p	p	p	-	ETB

Set control

SOH	F	C	S	C	D	-	r	M	-	-	-	-	-	-	-	ETB

M = 0 – automatic cutter mode
M = 1 – external, cut can be effected by I/O

Enquire control

SOH	F	C	S	C	D	-	w	p	p	p	p	p	p	p	p	ETB

Answer

SOH	A	M	-	-	-	-	-	-	x	p	p	p	p	p	p	p	p	ETB

Set cut speed

SOH	F	C	S	C	E	-	r	N	ETB

N = 0, 1, 2, 3, 4
0 = slow
4 = fast

Enquire cut speed

SOH	F	C	S	C	E	-	w	p	p	p	p	p	p	p	p	ETB

Answer

SOH	A	N	-	-	-	-	-	-	-	p	p	p	p	p	p	p	p	ETB

Set automatic return On/Off

SOH	F	C	S	C	F	-	r	N	-	-	-	-	-	-	-	ETB

N = 0 – Off
N = 1 – On (default)

Enquire automatic return On/Off

SOH	F	C	S	C	F	-	w	p	p	p	p	p	p	p	p	ETB

Answer

SOH	A	N	-	-	-	-	-	-	-	p	p	p	p	p	p	p	p	ETB

Dispenser

Set dispenser mode

SOH	F	C	D	C	-	-	r	N	-	-	-	-	-	-	-	ETB

N = 0 – dispenser mode Off
N = 1 – external I/O static
N = 2 – dispenser photocell
N = 3 – external I/O static continuous
N = 4 – dispenser photocell continuous
N = 5 – external I/O dynamic
N = 6 – external I/O dynamic continuous

Enquire dispenser mode

SOH	F	C	D	C	-	-	w	p	p	p	p	p	p	p	p	ETB

Answer

SOH	A	N	-	-	-	-	-	-	-	p	p	p	p	p	p	p	p	ETB

Set dispenser level photocell

SOH	F	C	C	F	-	-	r	V	N	N	-	-	-	-	-	ETB

V: pre-sign of offset (always +)
NN: offset value, 2 digit ASCII number in 1/10 Volt (5…40)

Enquire dispenser level photocell

SOH	F	C	C	F	-	-	w	p	p	p	p	p	p	p	p	ETB

Answer

SOH	A	V	N	N	-	-	-	-	-	p	p	p	p	p	p	p	p	ETB

Output

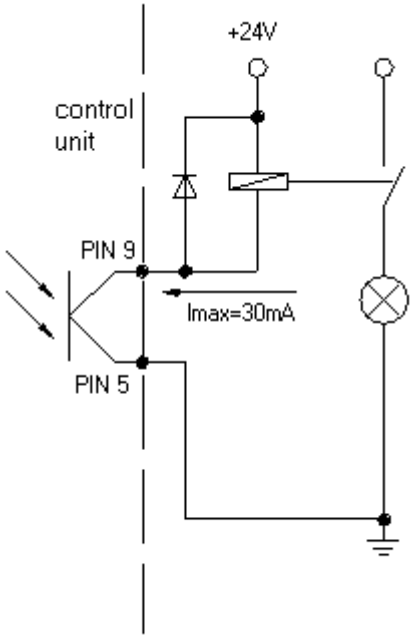

Input

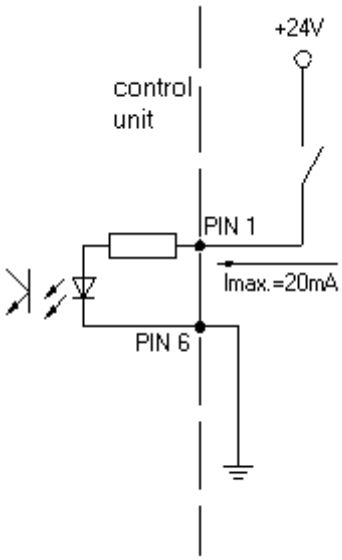

Circumstance I

Control of printer is effected by an electronic connection of an external control (e.g. PLC) at galvanically separated I/Os of printer. Here by the dispenser inputs the corresponding functions can be released according to settings of input trigger. At dispenser outputs, different operating conditions are signalised.

Example.: A label print should be released
Printer is in a dispenser mode, a print order is started and printer is in 'wainting' mode.
The corresponding functions lay on dispenser input IN1. For this entry the input trigger is on '1' (increasing flank). If the connected control (PLC) now a tension of approx. 24V on IN1, the printer starts the label print. If the input trigger is set to '0' (falling flank), printer should start the label print if no more tension is set to IN1.

Use the following parameter sets in order to execute the corresponding settings.

Enquire current status of dispenser inputs

SOH	F	C	M	D	A	-	w	p	p	p	p	p	p	p	p	ETB

Answer

SOH	A	0	1	2	3	4	5	6	7	p	p	p	p	p	p	p	p	ETB

Set status of dispenser outputs

SOH	F	C	M	D	B	-	r	1	2	3	4	5	6	7	8	ETB

1-8 (outputs 1-8): 1 – output will be set, 0 – output will be deleted

Enquire status of dispenser outputs

SOH	F	C	M	D	B	-	w	p	p	p	p	p	p	p	p	ETB

1-8 (outputs 1-8): 1 – output is active, 0 – output is not active

Answer

SOH	A	0	1	2	3	4	5	6	7	p	p	p	p	p	p	p	p	ETB

Set input trigger

SOH	F	C	M	D	C	-	r	1	2	3	4	5	6	7	8	ETB

1-8 (inputs 1-8): 1 – increased, 0 – decreased
s – I/O signal by interface, x – I/O signal blocked

Enquire input trigger

SOH	F	C	M	D	C	-	w	p	p	p	p	p	p	p	p	ETB

Answer

SOH	A	0	1	2	3	4	5	6	7	p	p	p	p	p	p	p	p	ETB

Set output signal level

SOH	F	C	M	D	D	-	r	1	2	3	4	5	6	7	8	ETB

1-8 (outputs 1-8): 1 – signal level 1, 0 – signal level 0
s – I/O signal by interface, x – I/O signal blocked

Enquire output signal level

SOH	F	C	M	D	C	-	w	p	p	p	p	p	p	p	p	ETB

Answer

SOH	A	0	1	2	3	4	5	6	7	p	p	p	p	p	p	p	p	ETB

Circumstance II

Control of printer is effected by parameter sets, i.e. by Ethernet or serial interface (e.g. PC).

With beginning of software version 1.44 it is possible to execute the before mentionned functions by parameter sets and to use dispenser inputs and outputs for the control of external applications/machines.
The release of a label print can consequently be released by the simulation of an active signal at IN1 (soh) … (etb). The allocation of a function to a dispenser input depends on printer model.
If signals of an external application/machine are connected, its current status can be identified by (soh)FCMDA-wpppppppp(etb).
The current operating mode of printer is signalised by the corresponding status messages (cp. auto status, status enquiry, …).
If control signals of an external application/machine connected to dispenser outputs, these can be set by (soh)FCMDB-r12345678(etb).

Listed below are the corresponding parameter sets.

Set I/O protocol port

SOH	F	C	M	D	E	-	r	T	C	P	-	-	-	-	-	ETB

Port: Off
COM1
COM2
TCP

Enquire I/O protocol port

SOH	F	C	M	D	E	-	w	p	p	p	p	p	p	p	p	ETB

Answer

SOH	A	0	1	2	3	-	-	-	-	p	p	p	p	p	p	p	p	ETB

Set software input

SOH	F	C	M	D	F	-	r	1	2	3	4	5	6	7	8	ETB

1-8 (inputs 1-8): 1 – set software input
0 – delete software input
- – not considering software input
p – pulse, execute software input once

Enquire current status of software inputs

SOH	F	C	M	D	F	-	w	p	p	p	p	p	p	p	p	ETB

Answer

SOH	A	0	1	2	3	4	5	6	7	p	p	p	p	p	p	p	p	ETB

Set software output

SOH	F	C	M	D	G	-	r	1	2	3	4	5	6	7	8	ETB

1-8 (outputs 1-8): 1 – set software output
0 – delete software output

Set dispenser offset

SOH	F	C	S	D	A	-	r	V	N	N	N	-	-	-	-	ETB

V: pre-sign of offset (always +)
NNN: offset value, 3 digit ASCII number in 1/10 mm

Enquire dispenser offset

SOH	F	C	S	D	A	-	w	p	p	p	p	p	p	p	p	ETB

Answer

SOH	A	V	N	N	N	-	-	-	-	p	p	p	p	p	p	p	p	ETB

Set debounce start signal

SOH	F	C	S	D	C	-	r	N	N	N	-	-	-	-	-	ETB

NNN: debounce time start signal in ms (0 … 100)

Enquire debounce start signal

SOH	F	C	S	D	C	-	w	p	p	p	p	p	p	p	p	ETB

Answer

SOH	A	N	N	N	-	-	-	-	-	p	p	p	p	p	p	p	p	ETB

Set start signal delay

SOH	F	C	S	D	D	-	r	N	N	N	-	-	-	-	-	ETB

NNN: start signal delay in 1/100 s (0 … 999)

Enquire start signal delay

SOH	F	C	S	D	D	-	w	p	p	p	p	p	p	p	p	ETB

Answer

SOH	A	N	N	N	-	-	-	-	-	p	p	p	p	p	p	p	p	ETB

Set save start signal

SOH	F	C	S	D	E	-	r	N	-	-	-	-	-	-	-	ETB

N: 0 = Off
1 = On

Enquire save start signal

SOH	F	C	S	D	E	-	w	p	p	p	p	p	p	p	p	ETB

Antswer

SOH	A	N	-	-	-	-	-	-	-	p	p	p	p	p	p	p	p	ETB

Set cancel continuous print (operating mode)

SOH	F	C	S	D	F	A	r	N	-	-	-	-	-	-	-	ETB

N: 0 = Off
1 = On

Enquire cancel continuous print (operating mode)

SOH	F	C	S	D	F	A	w	p	p	p	p	p	p	p	p	ETB

Answer

SOH	A	N	-	-	-	-	-	-	-	p	p	p	p	p	p	p	p	ETB

Dispenser photocell

Enquire current value at dispenser photocell

SOH	F	C	M	B	E	-	w	p	p	p	p	p	p	p	p	ETB

Answer

SOH	A	N	N	N	-	-	-	-	-	p	p	p	p	p	p	p	p	ETB

NNN: value of dispenser photocell, 3 digit ASCII number in 1/100 V

Enquire condition of dispenser photocell

SOH	F	C	M	B	E	A	w	p	p	p	p	p	p	p	p	ETB

Answer

SOH	A	N	-	-	-	-	-	-	-	p	p	p	p	p	p	p	p	ETB

N = 0 – no label is at photocell
N = 1 – label is at photocell
The set switching threshold of dispenser photocell is taken into consideration.

Scanner

Set scanner operating mode

SOH	F	C	D	M	-	-	r	M	P	N	F	-	-	-	-	ETB

M = Operating mode
0 = Off
1 = Mode 1 (data comparison)
2 = Mode 2 (check only readability)
3 = Mode 3 (check readability, graphic)

P = Interface
0 = COM1
1= COM2
This parameter is ignored as COM2 is always used as scanner interface at the moment.

N = Number of bad readings (NoRead)
N = -,0 … 8 (- = 0 NoReads, 0 = 1 NoRead … 8 = 9 NoReads)
Number of consecutive bad readings after which an error message appears.
At '-' (0 NoReads) no error message appears, i.e. the print is not interrupted. Only a warning is displayed at the screen.

F = Label feed (FeedLabel)
F = 0 … 4 (0 = 1 FeedLabel… 4 = 5 FeedLabels)

Enquire scanner operating mode

SOH	F	C	D	M	-	-	w	p	p	p	p	p	p	p	p	ETB

Answer

SOH	A	M	P	N	F	-	-	-	-	p	p	p	p	p	p	p	p	ETB

Set scan offset

SOH	F	C	D	M	A	-	r	N	N	N	N	-	-	-	-	ETB

N = Scan offset in 1/10 mm

Enquire scan offset

SOH	F	C	D	M	A	-	w	p	p	p	p	p	p	p	p	ETB

Answer

SOH	A	N	N	N	N	-	-	-	-	p	p	p	p	p	p	p	p	ETB

N = Current scan offset in 1/10 mm

Set scan length

SOH	F	C	D	M	B	-	r	N	N	N	N	-	-	-	-	ETB

N = Scan length in 1/10 mm

Enquire scan length

SOH	F	C	D	M	B	-	w	p	p	p	p	p	p	p	p	ETB

Answer

SOH	A	N	N	N	N	-	-	-	-	p	p	p	p	p	p	p	p	ETB

N = Cuttent scan length in 1/10 mm

Set scan mode

SOH	F	C	D	M	C	-	r	N	-	-	-	-	-	-	-	ETB

N = 0 – scan durint printing
N = 1 – scan after printing

Enquire scan mode

SOH	F	C	D	M	C	-	w	p	p	p	p	p	p	p	p	ETB

Answer

SOH	A	N	-	-	-	-	-	-	-	p	p	p	p	p	p	p	p	ETB

N = current scan mode

Set scan delay (scan after printing)

SOH	F	C	D	M	D	-	r	N	N	N	N	-	-	-	-	ETB

N = scan delay in ms [0 … 9990]

Require scan delay

SOH	F	C	D	M	D	-	w	p	p	p	p	p	p	p	p	ETB

Answer

SOH	A	N	N	N	N	-	-	-	-	p	p	p	p	p	p	p	p	ETB

N = current scan delay ms

Set scan timeout (scan after printing)

SOH	F	C	D	M	E	-	r	N	N	N	N	-	-	-	-	ETB

N = scan timeout in ms [0 … 9990]

Require scan timeout

SOH	F	C	D	M	E	-	w	p	p	p	p	p	p	p	p	ETB

Answer

SOH	A	N	N	N	N	-	-	-	-	p	p	p	p	p	p	p	p	ETB

N = current scan timeout in ms

Set scanner type

SOH	F	C	D	M	F	-	r	N	-	-	-	-	-	-	-	ETB

N = 0 – SICK CLP100 N = 1 – SICK CLV4XX N = 2 – DATALOGIC DS2XXX
N = 3 – SICK ICR803 N = 4 – SICK ICR840

Requiere scanner type

SOH	F	C	D	M	F	-	w	p	p	p	p	p	p	p	p	ETB

Answer

SOH	A	N	-	-	-	-	-	-	-	p	p	p	p	p	p	p	p	ETB

N = currently set scanner tpye

Scanner variable

In mode 1 (data comparison) it is necessary to fix the order of bar code data to scann several codes onto one label. Because of this reason bar code data has to be defined as scanner variable in text sets. The text set has the following structure:

SOH	BM	[n]	=	S	V	(	a	;	f	)	text data	ETB

=SV identification scanner variable
a field active (0 = not active, 1 = active, i.e. code is scanned)
f field number for definition of code order (1 …)

<u>Examples</u>

fixed text:
(SOH)BM[1]=SV(1;1)123456(ETB)

variable text (counter):
(SOH)BM[1]=SV(1;1)=CN(10;0;4;+1;1)0001(ETB)

Save configuration permanent

In case you want to save the described settings permanent into the printer, then you have to transmit the following command to the printer.

SOH	F	X	-	-	-	-	r	N	-	-	-	-	-	-	-	ETB
N: 0 = save current parameter																
1 = set all parameters to default values																
Then the print module performs a restart																

Readout configuration

SOH	F	X	-	-	-	-	w	-	-	-	-	-	-	-	-	ETB

The printer sends as answer all current settings as parameter sets.

Status enquiry

Host computer can receive information about the printer by the serial interface.
The status enquiry has the following data format:

SOH	S	ETB

S = ASCIIs

Status return information:
After receiving the status enquiry the printer sends the corresponding status return information.

Data format of status enquiry

SOH	1. Byte								2. Byte								5. – 1. digit	ETB
	8	7	6	5	4	3	2	1	8	7	6	5	4	3	2	1		

1. Byte	=	1. status byte
		8. Bit = free 7. Bit = always set 6. Bit = free 5. Bit = 1 – active print order 0 – no. of pieces = 0 (no print order) 4. Bit = 1 – stop key activated 0 – stop key not activated 3. Bit = cutter error 0 – no error; 1 – error 2. Bit = labels 0 – no error; 1 – error 1. Bit transfer ribbon 0 – no error; 1 – error
2. Byte	=	2. status byte
		8. - 4. Bit = free 3. Bit = memory card 2. Bit = mask set 1. Bit = printhead temperature
5.-1. position	=	number of pieces with 5 digits as ASCII characters min. '00000' / max. '65535'

AUTOSTATUS

The printers are equipped with an auto status function, i.e. in certain operating modes the printer actively sends the corresponding status. This can be enquired by the serial interface.

To activate the auto status, the host computer has to send the following command to the printer:

SOH	G	1. Byte	2. Byte	ETB

Each of the below indicated message which is observed and send by the printer has to be transmitted with a set Bit (see table below 1. Byte and 2. Byte) to the printer via the auto state function. The printer sends after each performed condition the corresponding message (answer) to the host computer.

The following messages are provided:

1. **Start of generation**
2. **End of generation**
   The printer sends this state in case data for a complete label was generated. The test print was not taken into consideration.
   For counters/date variables the printer sends for each label a status cycle (start, end).
3. **Start of printing**
4. **End of printing**
   The start of the print is send in case the generated data is send.
   The end of the print is send in case the print of the label is finished and the motor has stopped.
5. **Start of cutting**
6. **End of cutting**
   This status describes the cutting. It can be checked for timeout and the end of the cut movement → error.
7. **Start of feeding**
8. **End of feeding**
   This status is send in case an additional feeding (dispenser, cutter, tear off) is released.
9. **Start of a print order**
10. **End of print order**
    This status signalises the start and end of a complete print order (1…99999 labels). This status is active in all operating modes.
11. **Error**
    This status message is send in case an error occurs.
12. **Printing stopped**
    This message is send if the printing is stopped.
13. **Printing resumed**
    This message is send if the printing is resumed.

The printer sends the auto status in the following format to the host computer:

SOH	G	1. Byte	2. Byte	ETB

1. Byte

8. Bit	7. Bit	6. Bit	5. Bit	4. Bit	3. Bit	2. Bit	1. Bit
start generating	end generating	start printing	end printing	start cutting	end cutting	start feeding	always 0

2. Byte

8. Bit	7. Bit	6. Bit	5. Bit	4. Bit	3. Bit	2. Bit	1. Bit
end feeding	start print order	end print order	error	free	printing stopped	printing resumed	always 0

Attention: Bit 1 has to be in1. Byte and 2. Byte always 0, otherwise the printer possibly could recognise SOH or ETB.

At the status message of the printer to the host computer always at least 1 Bit is set. However, it could be occur that several Bits are set at the same time.
At the status demand of the host computer to the printer it is also possible that several Bits are set at the same time.

The auto status demand is saved in the printer, i.e. it is set to 0 after switching off/on. Therefore it is necessary to demand it anew after each time the printer is switched on.

Example:

The printer should observe the start of a print order. For this the host computer sends the following demand to the printer.

SOH	G	00000000	01000000	ETB

After the condition is fulfilled (= start of the print order) the printer sends the following message to the host computer:

SOH	G	00000000	01000000	ETB

With regard to the contents the answer corresponds always to the format set.

CHARACTER SETS

		Bitmap Fonts												Vector Fonts					
	ID	01	02	03	04	05	07	21	22	23	24	28	29	1/2	3/4	5/6	7/8	9/10	11/12
		7x9 10x14	10x14 15x21	15x21 22x31	32x45 48x67	15x26 [1)] 22x39 [1)]	10x18 [1)] 15x27 [1)]	1,0; 13	1,8; 21	2,6; 31	5,6; 67	4,0; 48	0,8; 9	Helvetica Bold	Helvetica Roman	Swiss Light	Basker-ville	Brush Script	Mono-space
GEM Germn		2)	2)	2)	2)	2)	2)	2)	2)	2)	2)	2)	2)	2)	2)	2)	2)	2)	2)
GEM English		2)	2)	2)	2)	2)	2)	2)	2)	2)	2)	2)	2)	2)	2)	2)	2)	2)	2)
GEM French		2)	2)	2)	2)	2)	2)	2)	2)	2)	2)	2)	2)	2)	2)	2)	2)	2)	2)
GEM Swedish		2)	2)	2)	2)	2)	2)	2)	2)	2)	2)	2)	2)	2)	2)	2)	2)	2)	2)
GEM Danish		2)	2)	2)	2)	2)	2)	2)	2)	2)	2)	2)	2)	2)	2)	2)	2)	2)	2)
CP 437 (German)		2)	2)	2)	2)	2)	2)	2)	2)	2)	2)	2)	2)	2)	2)	2)	2)	2)	2)
CP 850 (mutilingual West European)		2)	2)	2)	2)	2)	2)	2)	2)	2)	2)	2)	2)	2)	2)	2)	2)	2)	2)
CP 852 (multinlingual East European)		5)	5)	5)	5)	5)	5)	5)	5)	5)	5)	5)	5)	6)	6)	6)	6)	6)	6)
CP1250 (Latin 2; Central European)		3)	3)	3)	3)	3)	3)	3)	3)	3)	3)	3)	3)	2)	2)	6)	6)	6)	2)
CP1251 (Cyrillic)		6)	6)	6)	6)	6)	6)	6)	6)	6)	6)	6)	6	4)	4)	6)	6)	6)	4)
CP1252 ANSI (Latin 1, West European)		2)	2)	2)	2)	2)	2)	2)	2)	2)	2)	2)	2)	2)	2)	2)	2)	2)	2)
CP1253 (Greek)		6)	6)	6)	6)	6)	6)	6)	6)	6)	6)	6)	6	4)	4)	6)	6)	6)	4)
CP1254 (Latin 5, Turkish)		6)	6)	6)	6)	6)	6)	6)	6)	6)	6)	6)	6	4)	4)	6)	6)	6)	4)
CP 1257 (Baltic)		6)	6)	6)	6)	6)	6)	6)	6)	6)	6)	6)	6	4)	4)	6)	6)	6)	4)

[1)] descenders
[2)] standard
[3)] at the moment not available, can be replaced by vector fonts (ID3; ID11)
[4)] on demand, beginning with version 1.41a
[5)] on demand, only 200 dpi printers
[6)] not available

Beginning with version 1.41a different character sets were offered but as default the printers are equipped with Latin 1.

Following languages are supported:

Afrikaans	English	Italian	Serbian
Albanian	Estonian	Latvian	Slovak
Basque	Faeroese	Lithuanian	Slovenian
Belarusian	Finnish	Macedonian (FYROM)	Spanish
Bulgarian	French	Norwegian (Bokmal)	Swahili
Catalan	German	Norwegian (Nynorsk)	Swedish
Croatian	Greek (modern, monotonic)	Polish	Turkish
Czech	Hungarian	Portuguese	Ukrainian
Danish	Icelandic	Romanian	
Dutch	Indonesian	Russian	

Outline of the most important character sets for Central and East European languages

Codepage	Unterstützte Sprachen
1251 (Cyrillic)	Russian, Bearusian, Serbian, Bulgarian, Ukrainian, Macedonian
1250 (Latin 2, Central European)	Romanian, Slovak, Hungarian, Slovenian, Croatian, Serbian, Polish, Czech
852 (multilingual, Eas European)	Polish, Czech, Romanian, Slovak, Hungarian, Slovenian, Croatian, Serbian
1257 (Baltic)	Estonian, Latvian, Lithuanian

International ANSI character font

ANSI	Dec.	HEX	ANSI	Dec.	HEX	ANSI	Dec.	HEX	ANSI	Dec.	HEX	ANSI	Dec.	HEX
SP	32	20	Q	81	51	‚	130	82	³	179	B3	ä	228	E4
!	33	21	R	82	52	ƒ	131	83	´	180	B4	å	229	E5
"	34	22	S	83	53	„	132	84	µ	181	B5	æ	230	E6
#	35	23	T	84	54	…	133	85	¶	182	B6	ç	231	E7
$	36	24	U	85	55	†	134	86	·	183	B7	è	232	E8
%	37	25	V	86	56	‡	135	87	¸	184	B8	é	233	E9
&	38	26	W	87	57	ˆ	136	88	¹	185	B9	ê	234	EA
'	39	27	X	88	58	‰	137	89	º	186	BA	ë	235	EB
(	40	28	Y	89	59	Š	138	8A	»	187	BB	ì	236	EC
)	41	29	Z	90	5A	‹	139	8B	¼	188	BC	í	237	ED
*	42	2A	[	91	5B	Œ	140	8C	½	189	BD	î	238	EE
+	43	2B	\	92	5C		141	8D	¾	190	BE	ï	239	EF
,	44	2C	]	93	5D	Ž	142	8E	¿	191	BF	ð	240	F0
-	45	2D	^	94	5E		143	8F	À	192	C0	ñ	241	F1
.	46	2E	_	95	5F		144	90	Á	193	C1	ò	242	F2
/	47	2F	`	96	60	‘	145	91	Â	194	C2	ó	243	F3
0	48	30	a	97	61	’	146	92	Ã	195	C3	ô	244	F4
1	49	31	b	98	62	“	147	93	Ä	196	C4	õ	245	F5
2	50	32	c	99	63	”	148	94	Å	197	C5	ö	246	F6
3	51	33	d	100	64	•	149	95	Æ	198	C6	÷	247	F7
4	52	34	e	101	65	–	150	96	Ç	199	C7	ø	248	F8
5	53	35	f	102	66	—	151	97	È	200	C8	ù	249	F9
6	54	36	g	103	67	˜	152	98	É	201	C9	ú	250	FA
7	55	37	h	104	68	™	153	99	Ê	202	CA	û	251	FB
8	56	38	i	105	69	š	154	9A	Ë	203	CB	ü	252	FC
9	57	39	j	106	6A	›	155	9B	Ì	204	CC	ý	253	FD
:	58	3A	k	107	6B	œ	156	9C	Í	205	CD	þ	254	FE
;	59	3B	l	108	6C		157	9D	Î	206	CE	ÿ	255	FF
<	60	3C	m	109	6D	ž	158	9E	Ï	207	CF			
=	61	3D	n	110	6E	Ÿ	159	9F	Ð	208	D0			
>	62	3E	o	111	6F		160	A0	Ñ	209	D1			
?	63	3F	p	112	70	¡	161	A1	Ò	210	D2			
@	64	40	q	113	71	¢	162	A2	Ó	211	D3			
A	65	41	r	114	72	£	163	A3	Ô	212	D4			
B	66	42	s	115	73	¤	164	A4	Õ	213	D5			
C	67	43	t	116	74	¥	165	A5	Ö	214	D6			
D	68	44	u	117	75	¦	166	A6	×	215	D7			
E	69	45	v	118	76	§	167	A7	Ø	216	D8			
F	70	46	w	119	77	¨	168	A8	Ù	217	D9			
G	71	47	x	120	78	©	169	A9	Ú	218	DA			
H	72	48	y	121	79	ª	170	AA	Û	219	DB			
I	73	49	z	122	7A	«	171	AB	Ü	220	DC			
J	74	4A	{	123	7B	¬	172	AC	Ý	221	DD			
K	75	4B	¦	124	7C	-	173	AD	Þ	222	DE			
L	76	4C	}	125	7D	®	174	AE	ß	223	DF			
M	77	4D	~	126	7E	¯	175	AF	à	224	E0			
N	78	4E		127	7F	°	176	B0	á	225	E1			
O	79	4F	€	128	80	±	177	B1	â	226	E2			
P	80	50		129	81	²	178	B2	ã	227	E3			

Codepage 437

Dec.		Dec.		Dec.		Dec.		Dec.	
32		81	Q	130	é	179		228	
33	!	82	R	131	â	180		229	
34	'	83	S	132	ä	181		230	µ
35	#	84	T	133	à	182		231	
36	$	85	U	134	å	183		232	
37	%	86	V	135	ç	184		233	
38	&	87	W	136	ê	185		234	
39	'	88	X	137	ë	186		235	
40	(	89	Y	138	è	187		236	
41	)	90	Z	139	ï	188		237	Ø
42	*	91	[	140	î	189		238	
43	+	92	\	141	ì	190		239	
44	,	93	]	142	Ä	191		240	
45	-	94	^	143	Å	192		241	
46	.	95	_	144	É	193		242	
47	/	96	`	145	æ	194		243	
48	0	97	a	146	Æ	195		244	
49	1	98	b	147	ô	196		245	
50	2	99	c	148	ö	197		246	
51	3	100	d	149	ò	198		247	
52	4	101	e	150	û	199		248	°
53	5	102	f	151	ù	200		249	
54	6	103	g	152	ÿ	201		250	
55	7	104	h	153	Ö	202		251	
56	8	105	i	154	Ü	203		252	
57	9	106	j	155	¢	204		253	
58	:	107	k	156	£	205		254	
59	;	108	l	157	¥	206		255	
60	<	109	m	158		207			
61	=	110	n	159		208			
62	>	111	o	160	á	209			
63	?	112	p	161	í	210			
64	@	113	q	162	ó	211			
65	A	114	r	163	ú	212			
66	B	115	s	164	ñ	213	€		
67	C	116	t	165	Ñ	214			
68	D	117	u	166		215			
69	E	118	v	167	º	216			
70	F	119	w	168		217			
71	G	120	x	169		218			
72	H	121	y	170		219			
73	I	122	z	171	½	220			
74	J	123	{	172	¼	221			
75	K	124	¦	173		222			
76	L	125	}	174	«	223			
77	M	126	~	175	»	224			
78	N	127		176		225	ß		
79	O	128	Ç	177		226			
80	P	129	ü	178		227			

Codepage 850

Dec.		Dec.		Dec.		Dec.		Dec.	
32		81	Q	130	é	179		228	õ
33	!	82	R	131	â	180	Á	229	Õ
34	'	83	S	132	ä	181	Â	230	µ
35	#	84	T	133	à	182	À	231	
36	$	85	U	134	å	183	©	232	
37	%	86	V	135	ç	184		233	Ú
38	&	87	W	136	ê	185		234	Û
39	'	88	X	137	ë	186		235	Ù
40	(	89	Y	138	è	187		236	
41	)	90	Z	139	ï	188	¢	237	
42	*	91	[	140	î	189	¥	238	
43	+	92	\	141	ì	190		239	
44	,	93	]	142	Ä	191		240	
45	-	94	^	143	Å	192		241	
46	.	95	_	144	É	193		242	
47	/	96	`	145	æ	194		243	¾
48	0	97	a	146	Æ	195		244	¶
49	1	98	b	147	ô	196		245	§
50	2	99	c	148	ö	197		246	
51	3	100	d	149	ò	198	ã	247	
52	4	101	e	150	û	199	Ã	248	°
53	5	102	f	151	ù	200		249	
54	6	103	g	152	ÿ	201		250	
55	7	104	h	153	Ö	202		251	
56	8	105	i	154	Ü	203		252	
57	9	106	j	155	ø	204		253	
58	:	107	k	156	£	205		254	
59	;	108	l	157	Ø	206		255	
60	<	109	m	158		207			
61	=	110	n	159		208			
62	>	111	o	160	á	209			
63	?	112	p	161	í	210	Ê		
64	@	113	q	162	ó	211	Ë		
65	A	114	r	163	ú	212	È		
66	B	115	s	164	ñ	213			
67	C	116	t	165	Ñ	214	Í		
68	D	117	u	166		215	Î		
69	E	118	v	167	º	216	Ï		
70	F	119	w	168		217			
71	G	120	x	169	®	218			
72	H	121	y	170		219			
73	I	122	z	171	½	220			
74	J	123	{	172	¼	221			
75	K	124	|	173		222	Ì		
76	L	125	}	174	«	223			
77	M	126	~	175	»	224	Ó		
78	N	127		176		225	ß		
79	O	128	Ç	177		226	Ô		
80	P	129	ü	178		227	Ò		

Codepage 852*

Dec.		Dec.		Dec.		Dec.		Dec.	
32		81	Q	130	é	179		228	ń
33	!	82	R	131	â	180		229	ň
34	'	83	S	132	ä	181	Á	230	Š
35	#	84	T	133	ů	182	Â	231	š
36	$	85	U	134	ć	183	Ě	232	Ŕ
37	%	86	V	135	ç	184	Ş	233	Ú
38	&	87	W	136	ł	185		234	ŕ
39	'	88	X	137	ë	186		235	Ũ
40	(	89	Y	138	Ő	187		236	ý
41	)	90	Z	139	ő	188		237	Ý
42	*	91	[	140	î	189	Ż	238	ţ
43	+	92	\	141	Ź	190	ż	239	´
44	,	93	]	142	Ä	191		240	-
45	-	94	^	143	Ć	192		241	'
46	.	95	_	144	É	193		242	
47	/	96	`	145	Ĺ	194		243	
48	0	97	a	146	Í	195		244	¯
49	1	98	b	147	ô	196		245	§
50	2	99	c	148	ö	197		246	÷
51	3	100	d	149	L	198	Ă	247	¸
52	4	101	e	150	l	199	ă	248	°
53	5	102	f	151	Ś	200		249	¨
54	6	103	g	152	ś	201		250	·
55	7	104	h	153	Ö	202		251	ũ
56	8	105	i	154	Ü	203		252	Ř
57	9	106	j	155	Ť	204		253	ř
58	:	107	k	156	t	205		254	
59	;	108	l	157	Ł	206		255	
60	<	109	m	158	×	207			
61	=	110	n	159	č	208	đ		
62	>	111	o	160	á	209	Đ		
63	?	112	p	161	Í	210	Ď		
64	@	113	q	162	ó	211	Ë		
65	A	114	r	163	ú	212	d		
66	B	115	s	164	Ą	213	Ň		
67	C	116	t	165	ą	214	í		
68	D	117	u	166	Ž	215	î		
69	E	118	v	167	ž	216	ě		
70	F	119	w	168	Ę	217			
71	G	120	x	169	ę	218			
72	H	121	y	170		219			
73	I	122	z	171	ź	220			
74	J	123	{	172	Č	221	Ţ		
75	K	124	128	173	ş	222	Ů		
76	L	125	129	174	«	223			
77	M	126	~	175	»	224	Ó		
78	N	127	⌂	176		225	ß		
79	O	128	Ç	177		226	Ô		
80	P	129	ű	178		227	Ń		

* Option

Codepage 857*

Dec.		Dec.		Dec.		Dec.		Dec.	
32		81	Q	130	é	179		228	õ
33	!	82	R	131	â	180		229	Õ
34	'	83	S	132	ä	181	Á	230	µ
35	#	84	T	133	à	182	Ă	231	R
36	$	85	U	134	å	183	À	232	µ
37	%	86	V	135	ç	184	©	233	Ú
38	&	87	W	136	ê	185		234	Û
39	'	88	X	137	ë	186		235	Ù
40	(	89	Y	138	è	187		236	ì
41	)	90	Z	139	ï	188		237	ÿ
42	*	91	[	140	î	189	¢	238	¯
43	+	92	\	141	ı	190	¥	239	´
44	,	93	]	142	Ä	191		240	-
45	-	94	^	143	Å	192		241	±
46	.	95	_	144	É	193		242	
47	/	96	`	145	æ	194		243	¾
48	0	97	a	146	Æ	195		244	¶
49	1	98	b	147	ô	196		245	§
50	2	99	c	148	ö	197		246	÷
51	3	100	d	149	ò	198	ã	247	¸
52	4	101	e	150	û	199	Ã	248	°
53	5	102	f	151	ù	200		249	¨
54	6	103	g	152	İ	201		250	·
55	7	104	h	153	Ö	202		251	¹
56	8	105	i	154	Ü	203		252	³
57	9	106	j	155	ø	204		253	²
58	:	107	k	156	£	205		254	
59	;	108	l	157	Ø	206		255	
60	<	109	m	158	Ş	207			
61	=	110	n	159	ş	208	º		
62	>	111	o	160	á	209	ª		
63	?	112	p	161	í	210	Ê		
64	@	113	q	162	ó	211	Ë		
65	A	114	r	163	ú	212	È		
66	B	115	s	164	ñ	213	Ň		
67	C	116	t	165	Ñ	214	í		
68	D	117	u	166	Ğ	215	î		
69	E	118	v	167	ğ	216	ï		
70	F	119	w	168	¿	217			
71	G	120	x	169	®	218			
72	H	121	y	170		219			
73	I	122	z	171	½	220			
74	J	123	{	172	¼	221	|		
75	K	124	|	173	¡	222	Ì		
76	L	125	}	174	«	223			
77	M	126	~	175	»	224	Ó		
78	N	127	⌂	176		225	ß		
79	O	128	Ç	177		226	Ô		
80	P	129	ü	178		227	Ò		

* Option

GEM German

Dec.		Dec.		Dec.		Dec.		Dec.	
32		81	Q	130	é	179	¢	228	€
33	!	82	R	131	â	180	œ	229	
34	'	83	S	132	ä	181	Œ	230	µ
35	#	84	T	133	à	182	À	231	
36	$	85	U	134	å	183	Ã	232	
37	%	86	V	135	ç	184	Õ	233	
38	&	87	W	136	ê	185	§	234	
39	'	88	X	137	ë	186	?	235	
40	(	89	Y	138	è	187	†	236	
41	)	90	Z	139	ï	188	¶	237	Ø
42	*	91	Ä	140	î	189	©	238	
43	+	92	Ö	141	ì	190	®	239	
44	,	93	Ü	142	Ä	191	™	240	
45	-	94	\	143	Å	192		241	
46	.	95	_	144	É	193	…	242	
47	/	96	`	145	æ	194	‰	243	
48	0	97	a	146	Æ	195	•	244	
49	1	98	b	147	ô	196	—	245	
50	2	99	c	148	ö	197	–	246	
51	3	100	d	149	ò	198	º	247	
52	4	101	e	150	û	199	Á	248	°
53	5	102	f	151	ù	200	Â	249	
54	6	103	g	152	ÿ	201	È	250	
55	7	104	h	153	Ö	202	Ê	251	¹
56	8	105	i	154	Ü	203	Ë	252	³
57	9	106	j	155	ø	204	Ì	253	²
58	:	107	k	156	£	205	Í	254	
59	;	108	l	157	Ø	206	Î	255	
60	<	109	m	158	~	207	Ï		
61	=	110	n	159	_	208	Ò		
62	>	111	o	160	á	209	Ó		
63	?	112	p	161	í	210	Ô		
64	@	113	q	162	ó	211			
65	A	114	r	163	ú	212			
66	B	115	s	164	ñ	213	Ù		
67	C	116	t	165	Ñ	214	Ú		
68	D	117	u	166		215	Û		
69	E	118	v	167		216	Ÿ		
70	F	119	w	168		217			
71	G	120	x	169	'	218			
72	H	121	y	170	”	219			
73	I	122	z	171	‹	220			
74	J	123	ä	172	›	221			
75	K	124	ö	173		222			
76	L	125	ü	174	«	223	µ		
77	M	126	ß	175	»	224	\		
78	N	127	º	176	ã	225	ß		
79	O	128	Ç	177	õ	226			
80	P	129	ü	178	¥	227			

GEM English

Dec.		Dec.		Dec.		Dec.		Dec.	
32		81	Q	130	é	179	¢	228	€
33	!	82	R	131	â	180	œ	229	
34	'	83	S	132	ä	181	Œ	230	µ
35	#	84	T	133	à	182	À	231	
36	$	85	U	134	å	183	Ã	232	
37	%	86	V	135	ç	184	Õ	233	
38	&	87	W	136	ê	185	§	234	
39	'	88	X	137	ë	186	?	235	
40	(	89	Y	138	è	187	†	236	
41	)	90	Z	139	ï	188	¶	237	Ø
42	*	91	Ä	140	î	189	©	238	
43	+	92	-	141	ì	190	®	239	
44	,	93	Ü	142	Ä	191	™	240	
45	-	94	¼	143	Å	192		241	
46	.	95		144	É	193	…	242	
47	/	96	`	145	æ	194	‰	243	
48	0	97	a	146	Æ	195	•	244	
49	1	98	b	147	ô	196	—	245	
50	2	99	c	148	ö	197	–	246	
51	3	100	d	149	ò	198	°	247	
52	4	101	e	150	û	199	Á	248	°
53	5	102	f	151	ù	200	Â	249	
54	6	103	g	152	ÿ	201	È	250	
55	7	104	h	153	Ö	202	Ê	251	
56	8	105	i	154	Ü	203	Ë	252	
57	9	106	j	155	ø	204	Ì	253	
58	:	107	k	156	£	205	Í	254	
59	;	108	l	157	Ø	206	Î	255	
60	<	109	m	158	~	207	Ï		
61	=	110	n	159	_	208	Ò		
62	>	111	o	160	á	209	Ó		
63	?	112	p	161	í	210	Ô		
64	£	113	q	162	ó	211			
65	A	114	r	163	ú	212			
66	B	115	s	164	ñ	213	Ù		
67	C	116	t	165	Ñ	214	Ú		
68	D	117	u	166	¼	215	Û		
69	E	118	v	167	½	216	Ÿ		
70	F	119	w	168	¾	217			
71	G	120	x	169	'	218			
72	H	121	y	170	”	219			
73	I	122	z	171	‹	220			
74	J	123	ä	172	›	221			
75	K	124	ö	173		222			
76	L	125	ü	174	«	223	µ		
77	M	126	¾	175	»	224	\		
78	N	127		176	ã	225	ß		
79	O	128	Ç	177	õ	226			
80	P	129	ü	178	¥	227			

GEM French

Dec.		Dec.		Dec.		Dec.		Dec.	
32		81	Q	130	é	179	¢	228	€
33	!	82	R	131	â	180	œ	229	
34	'	83	S	132	ä	181	Œ	230	µ
35	#	84	T	133	à	182	À	231	
36	$	85	U	134	å	183	Ã	232	
37	%	86	V	135	ç	184	Õ	233	
38	&	87	W	136	ê	185	§	234	
39	'	88	X	137	ë	186	?	235	
40	(	89	Y	138	è	187	†	236	
41	)	90	Z	139	ï	188	¶	237	Ø
42	*	91	ô	140	î	189	©	238	
43	+	92	ç	141	ì	190	®	239	
44	,	93	Ü	142	Ä	191	™	240	
45	-	94	¼	143	Å	192		241	
46	.	95	½	144	É	193	…	242	
47	/	96	¾	145	æ	194	‰	243	
48	0	97	a	146	Æ	195	•	244	
49	1	98	b	147	ô	196	—	245	
50	2	99	c	148	ö	197	–	246	
51	3	100	d	149	ò	198	°	247	
52	4	101	e	150	û	199	Á	248	°
53	5	102	f	151	ù	200	Â	249	
54	6	103	g	152	ÿ	201	È	250	
55	7	104	h	153	Ö	202	Ê	251	
56	8	105	i	154	Ü	203	Ë	252	
57	9	106	j	155	ø	204	Ì	253	
58	:	107	k	156	£	205	Í	254	
59	;	108	l	157	Ø	206	Î	255	
60	<	109	m	158	~	207	Ï		
61	=	110	n	159	_	208	Ò		
62	>	111	o	160	á	209	Ó		
63	?	112	p	161	í	210	Ô		
64	à	113	q	162	ó	211			
65	A	114	r	163	ú	212			
66	B	115	s	164	ñ	213	Ù		
67	C	116	t	165	Ñ	214	Ú		
68	D	117	u	166	¼	215	Û		
69	E	118	v	167	½	216	Ÿ		
70	F	119	w	168	¾	217			
71	G	120	x	169	'	218			
72	H	121	y	170	”	219			
73	I	122	z	171	‹	220			
74	J	123	é	172	›	221			
75	K	124	ñ	173		222			
76	L	125	è	174	«	223	µ		
77	M	126	ß	175	»	224	\		
78	N	127	º	176	ã	225	ß		
79	O	128	Ç	177	õ	226			
80	P	129	ü	178	¥	227			

GEM Swedish

Dec.		Dec.		Dec.		Dec.		Dec.	
32		81	Q	130	é	179	¢	228	€
33	!	82	R	131	â	180	œ	229	
34	'	83	S	132	ä	181	Œ	230	µ
35	#	84	T	133	à	182	À	231	
36	$	85	U	134	å	183	Ã	232	
37	%	86	V	135	ç	184	Õ	233	
38	&	87	W	136	ê	185	§	234	
39	'	88	X	137	ë	186	?	235	
40	(	89	Y	138	è	187	†	236	
41	)	90	Z	139	ï	188	¶	237	Ø
42	*	91	Ä	140	î	189	©	238	
43	+	92	Ö	141	ì	190	®	239	
44	,	93	Å	142	Ä	191	™	240	
45	-	94	Ü	143	Å	192		241	
46	.	95	_	144	É	193	…	242	
47	/	96	é	145	æ	194	‰	243	
48	0	97	a	146	Æ	195	•	244	
49	1	98	b	147	ô	196	—	245	
50	2	99	c	148	ö	197	–	246	
51	3	100	d	149	ò	198	°	247	
52	4	101	e	150	û	199	Á	248	°
53	5	102	f	151	ù	200	Â	249	
54	6	103	g	152	ÿ	201	È	250	
55	7	104	h	153	Ö	202	Ê	251	
56	8	105	i	154	Ü	203	Ë	252	
57	9	106	j	155	ø	204	Ì	253	
58	:	107	k	156	£	205	Í	254	
59	;	108	l	157	Ø	206	Î	255	
60	<	109	m	158	~	207	Ï		
61	=	110	n	159	_	208	Ò		
62	>	111	o	160	á	209	Ó		
63	?	112	p	161	í	210	Ô		
64	@	113	q	162	ó	211			
65	A	114	r	163	ú	212			
66	B	115	s	164	ñ	213	Ù		
67	C	116	t	165	Ñ	214	Ú		
68	D	117	u	166	¼	215	Û		
69	E	118	v	167	½	216	Ÿ		
70	F	119	w	168	¾	217			
71	G	120	x	169	'	218			
72	H	121	y	170	”	219			
73	I	122	z	171	‹	220			
74	J	123	ä	172	›	221			
75	K	124	ö	173		222			
76	L	125	å	174	«	223	µ		
77	M	126	ü	175	»	224	\		
78	N	127	°	176	ã	225	ß		
79	O	128	Ç	177	õ	226			
80	P	129	ü	178	¥	227			

GEM Danish

Dec.		Dec.		Dec.		Dec.		Dec.	
32		81	Q	130	é	179	¢	228	€
33	!	82	R	131	â	180	œ	229	
34	'	83	S	132	ä	181	Œ	230	µ
35	#	84	T	133	à	182	À	231	
36	$	85	U	134	å	183	Ã	232	
37	%	86	V	135	ç	184	Õ	233	
38	&	87	W	136	ê	185	§	234	
39	'	88	X	137	ë	186	?	235	
40	(	89	Y	138	è	187	†	236	
41	)	90	Z	139	ï	188	¶	237	Ø
42	*	91	Æ	140	î	189	©	238	
43	*	92	Ø	141	ì	190	®	239	
44	,	93	Å	142	Ä	191	™	240	
45	_	94	Ö	143	Å	192		241	
46	.	95	_	144	É	193	…	242	
47	/	96	`	145	æ	194	‰	243	
48	0	97	a	146	Æ	195	•	244	
49	1	98	b	147	ô	196	—	245	
50	2	99	c	148	ö	197	–	246	
51	3	100	d	149	ò	198	°	247	
52	4	101	e	150	û	199	Á	248	°
53	5	102	f	151	ù	200	Â	249	
54	6	103	g	152	ÿ	201	È	250	
55	7	104	h	153	Ö	202	Ê	251	
56	8	105	i	154	Ü	203	Ë	252	
57	9	106	j	155	ø	204	Ì	253	
58	:	107	k	156	£	205	Í	254	
59	;	108	l	157	Ø	206	Î	255	
60	<	109	m	158	~	207	Ï		
61	=	110	n	159	_	208	Ò		
62	>	111	o	160	á	209	Ó		
63	?	112	p	161	í	210	Ô		
64	ä	113	q	162	ó	211			
65	A	114	r	163	ú	212			
66	B	115	s	164	ñ	213	Ù		
67	C	116	t	165	Ñ	214	Ú		
68	D	117	u	166	¼	215	Û		
69	E	118	v	167	½	216	Ÿ		
70	F	119	w	168	¾	217			
71	G	120	x	169	'	218			
72	H	121	y	170	”	219			
73	I	122	z	171	‹	220			
74	J	123	æ	172	›	221			
75	K	124	ø	173		222			
76	L	125	å	174	«	223	µ		
77	M	126	Ü	175	»	224	\		
78	N	127	°	176	ã	225			
79	O	128	Ç	177	õ	226	ß		
80	P	129	ü	178	¥	227			

FONT EXAMPLES

Bitmap fonts (not proportional)

Font 01 (8 x 11) ratio 3:3
Font 02 (12 x 17) ratio 3:3
Font 03 (18 x 26) ratio 2:2
Font 04 (40 x 56) ratio 1:1
Font 05 (18 x 32 with descender) ratio 2:2
Font 07 (12 x 22 with descender) ratio 2:2

Bitmap fonts (proportional)

Font 21 (10 proportional) ratio 3:3
Font 22 (18 proportional) ratio 2:2
Font 23 (26 proportional) ratio 2:2
Font 24 (56 proportional) ratio 1:1
Font 28 (40 proportional) ratio 1:1
Font 29 (8 proportional) ratio 5:5

Vector fonts

Absender (Baskerville)

Gold, Petra (Swiss Light)
Name, Vorname (Helvetica Bold)
Goldstraße 456 (Swiss Light)
Straße, Hausnummer (Helvetica Bold)
23456 Golddorf (Swiss Light)
PLZ, Ort (Helvetica Bold)

Das ist ein Musteretikett
für die Darstellung der
Schriftarten (Monospace)

Musterlieferung
Bitte bestätigen Sie
den Empfang. (Brush Script)

Empfänger (Baskerville)

Mustermann, Max (Helvetica Roman)
Name, Vorname (Helvetica Bold)
Musterstraße 123 (Helvetica Roman)
Straße, Hausnummer (Helvetica Bold)
45678 Musterstadt (Helvetica Roman)
PLZ, Ort (Helvetica Bold)

INDEX

A

ANSI, character set 99
autoload, parameter set 58
automatic return (cutter), parameter set 85
autostatus 95, 96
Aztec code, mask set 26

B

backfeed, parameter set 59
bad readings (scanner), parameter set 91
bar code
  mask set 17
  rotation 6
bitmap fonts, font examples 109
buzzer/display, parameter set 58

C

character sets
  ANSI 99
  Codepage 437 100
  Codepage 850 101
  Codepage 852 102
  Codepage 857 103
  GEM Danish 108
  GEM English 105
  GEM French 106
  GEM German 104
  GEM Swedish 107
  general information 97, 98
check digit (variable definition) 46
CODABLOCK F, mask set 23
Codepage 437, character set 100
Codepage 850, character set 101
Codepage 852, character set 102
Codepage 857, character set 103
codepage selection, parameter set 57
columns
  number, parameter set 50
  width, parameter set 50
configuration
  readout 94
  save permanent 94
connector assignment RS485/RS422, serial data transmission 3
continuous print (dispenser), parameter set 90
contrast, parameter set 51
control (cutter), parameter set 85
counter (extended), variables 36
counter, variables 35
currency, variable 41
cut
  Speed, parameter set 85
  width, parameter set 85
cutter (option)
  automatic return 85

control 85
cut speed 85
cut width 85
double cut 84
offset, parameter set 84
operating mode 84
cutter offset, parameter set 63

D

data format
explanation 8
field name 10, 11, 12, 13
general information 7
data memory, parameter set 61
DataMatrix, mask set 21
date/time
date 68
summer/wintertime 69
summertime begin 70
summertime end 70
time 68
time shifting 70
variable 37, 38, 39, 40
datumpoint, setting 6
debounce start signal (dispenser), parameter set 89
default label on/off, parameter set 59
device settings
autoload 58
backfeed, operating mode 59
buzzer 58
codepage selection 57
default label on/off 59
display brightness 58
external print parameters 56
field handling 56
Hotstart 58
keyboard layout 57
label change confirmation 59
print speed 55
printer language 56
ribbon save 55
transfer ribbon control 55
user guiding 57
DHCP support, parameter set 78
dispenser
inputs, parameter set 87
Level, parameter set 86
outputs, parameter set 87
photocell (status), parameter set 54, 90
photocell (value), parameter set 90
dispenser (option)
continuous print 90
debounce start signal 89
dispenser level 86
I/O protocol port 88
input trigger 87
inputs 87
operating mode 86
output signal level 87
outputs 87
save start signal 89

software input ... 88
software output ... 88
start signal delay ... 89
dispenser offset, parameter set ... 63
display brightness, parameter set ... 58
double cut, parameter set ... 84

E

emulation, parameter set ... 76
enquire value (label photocell), parameter set ... 53
EPC calculation (variable definition) ... 45
error (readout)
ID, parameter set ... 73
text, parameter set ... 73
error (reset), parameter set ... 73
ETB, parameter set ... 60
example
graphic, PCX format ... 33
mask set ... 30
text set ... 30
external print parameters, parameter set ... 56

F

feed, parameter set ... 76
field attributes/properties, definition ... 9
field handling, parameter set ... 56
field names, definition ... 10, 11, 12, 13
flip label, parameter set ... 51
font examples
bitmap fonts (not proportional) ... 109
bitmap fonts (proportional) ... 109
vector fonts ... 109
function group (password), parameter set ... 71

G

gap length in 1/100 mm, parameter set ... 49
gateway address (network), parameter set ... 77
GEM Danish, character set ... 108
GEM English, character set ... 105
GEM French, character set ... 106
GEM German, character set ... 104
GEM Swedish, character set ... 107
graphic
general format ... 31
internal, mask set ... 28
PCX format, example ... 33
pcx format, general information ... 32
rotation ... 6
GS1 DataBar (RSS), mask set ... 24
GS1 DataMatrix, mask set ... 22
GS1-128 parser (variable definition) ... 44

H

hotstart, parameter set ... 58

I

I/O protocol port (dispenser), parameter set ... 88
input trigger (dispenser), parameter set ... 87
interface

all interface parameters 60
date memory 61
interface protocol 60
scanner, parameter set 91
SOH/ETB 60
unknown interrogative set, reaction 61
interrogatibe sets (unknown), reaction 61
IP address (network), parameter set 77
ITF 14, mask set 18

K

keyboard layout, parameter set 57

L

label change confirmation, parameter set 59
label error length, parameter set 50
label parameter
column width 50
contrast 51
flip label 51
flip/rotate label 52
gap length in 1/100 mm 49
label alignment 51
label error length 50
label length in 1/100 mm 49
label photocell 48
label type 48
label width in 1/100 mm 49
material selection 52
measure label 48
measure label automatically 49
number of columns 50
rotate label 51
scan position 52
synchronization 50
label photocell
enquire value (label photocell) 53
enquire value (transfer ribbon photocell 53
level, maximal 53
level, minimal 53
parameter set 48
switching threshold 53
label width in 1/100 mm, parameter set 49
labels
alignment, parameter set 51
feed (scanner), parameter set 91
Length in 1/100 mm, parameter set 49
measure, parameter set 48
Type, parameter set 48
language, parameter set 56
line, mask set 27
lines (number), parameter set 73
link field, variables 34

M

MAC address (network), parameter set 79
mask set
Aztec code 26
bar code 17
CODABLOCK F 23

DataMatrix 21
example 30
graphic internal 28
GS1 DataBar (RSS) 24
GS1 DataMatrix 22
ITF 14 18
line 27
MAXICODE 20
PDF417 19
QR Code 25
rectangle 27
text 15, 16
material selection, parameter set 52
MAXICODE, mask set 20
memory card
change directory 82
create directory 82
data (variable definition) 44
delete directory 82
delete directory path 82
delete layout 81
drive status 83
format card 81
load file 81
readout free memory space 82
save label 81
size of CF card 83
standard directory via I/O 83
transfer file 83
mileage
printer, parameter set 67
printhead, parameter set 67
mode (ribbon prior warning) 66

N

netmask (network), parameter set 77
network (option)
DHCP support 78
gateway address 77
IP address 77
MAC address 79
netmask 77
NTP Server IP 79
NTP status 79
printer name 78
reset network device 80
time zone (hour offset) 80
transmission mode 78
NTP Server IP (network), parameter set 79
NTP status (network), parameter set 79

O

offset values
cutter offset 63
dispenser offset 63
tear off offset 62
x offset 62
y offset 62
online/offline, parameter set 64

operating mode
dispenser, parameter set ... 86
massicot, parameter set ... 84
scanner, parameter set ... 91

P

parallel data transmission
connection ... 5
general information ... 4
parameter sets
cancel print orders ... 76
cutter (option) ... 84
date/time ... 68
device settings ... 55
dispenser (option) ... 86
dispenser photocell ... 54, 90
emulation ... 76
error ID, readout ... 73
error text, readout ... 73
feed ... 76
interface ... 60
label photocell ... 53
memory card ... 81, 82, 83
network (option) ... 77
offset values ... 62
password ... 71, 72
password favorites menu ... 72
password function menu ... 72
password memory card ... 72
password printing manually ... 72
printing ... 73
quantity (print order) ... 74
reset error ... 73
scanner (option) ... 91
service functions ... 64
start printing ... 75
start/stop command ... 73
status print ... 76
test print ... 76
password, function group ... 71
PDF417, mask set ... 19
photocell (label)
level (maximal), parameter set ... 53
level (minimal), parameter set ... 53
print
speed, parameter set ... 55
start, parameter set ... 75
print orders (cancel), parameter set ... 76
printer name (network), parameter set ... 78
printhead
lockbar, parameter set ... 65
photocell, parameter set ... 65
resistance, parameter set ... 67
temperature, parameter set ... 65
printing, lines ... 73

Q

QR Code, mask set ... 25
quantity (print order), parameter set ... 74

R

readout, configuration 94
rectangle, mask set 27
reduced print speed, parameter set 67
reprint action, parameter set 64
reset network device (network), parameter set 80
ribbon save, parameter set 55
rotate label, parameter set 51
rotation
  bar code 6
  graphic 6
  txt 6
RS232
  assignment, cable 2
  hardware handshake 2

S

save permanent, configuration 94
save start signal (dispenser), parameter set 89
scan delay (scanner), parameter set 92
scan length (scanner), parameter set 91
scan mode (scanner), parameter set 92
scan offset (scanner), parameter set 91
scan position, parameter set 52
scan timeout (scanner), parameter set 92
scanner (option)
  bad readings 91
  interface 91
  label feed 91
  operating mode 91
  scan delay 92
  scan length 91
  scan mode 92
  scan offset 91
  scan timeout 92
  scanner type 92
  Variable 93
scanner tpye (scanner), parameter set 92
serial data transmission
  connection RS232 2
  connector assignment RS485/RS422 3
  connector assignment, DSUB socket 1
  xon/xoff protocol 1
service functions
  mileage, printer 67
  mileage, printhead 67
  mode (transfer ribbon prior warning) 66
  online/offline 64
  printhead lockbar 65
  printhead photocell 65
  printhead resistance 67
  printhead temperature 65
  reduced print speed (transfer ribbon prior warning) 67
  reprint action 64
  transfer ribbon diameter 66
  transfer ribbon prior warning 66
  winder output 64
shift variable, variables 42
signal level (output), parameter set 87

software (dispenser)
input, parameter set ... 88
output, parameter set ... 88
SOH, parameter set ... 60
start signal delay (dispenser), parameter set ... 89
start/stop command, parameter set ... 73
status
enquiry, data format ... 94
print, parameter set ... 76
return information, data format ... 94
substring (variable definition) ... 47
summer/wintertime (parameter sets)
automatical adjustment ... 69
summertime begin ... 70
summertime end ... 70
time shifting ... 70
switching threshold, parameter set ... 53
synchronization, parameter set ... 50

T

tear off offset, parameter set ... 62
test print, parameter set ... 76
text
mask set ... 15, 16
rotation ... 6
set, example ... 30
set, general information ... 29
time zone (network), parameter set ... 80
time, parameter set ... 68
transfer ribbon (parameter sets)
control ... 55
diameter ... 66
photocell, value ... 53
prior warning ... 66
prior warning diameter ... 66
transmission mode (network), parameter set ... 78

U

user guiding
parameter set ... 57
variable definition ... 43

V

variables
check digit ... 46
counter ... 35
currency variable ... 41
date/time ... 37, 38, 39, 40
EPC calculation ... 45
extended counter ... 36
GS1-128 parser ... 44
link field ... 34
memory card data ... 44
shift variable ... 42
substring ... 47
text structure ... 34
user guiding ... 43
vector fonts, font examples ... 109

W

winder output, parameter set 64

X

x offset, parameter set 62

Y

y offset, parameter set 62

Carl Valentin GmbH
Neckarstraße 78 – 86 u. 94 . 78056 Villingen-Schwenningen
Phone +49 7720 9712-0 . Fax +49 7720 9712-9901
info@carl-valentin.de . www.carl-valentin.de