valentin
DRUCKSYSTEME

DuoPrint

Spare parts list
Parts list

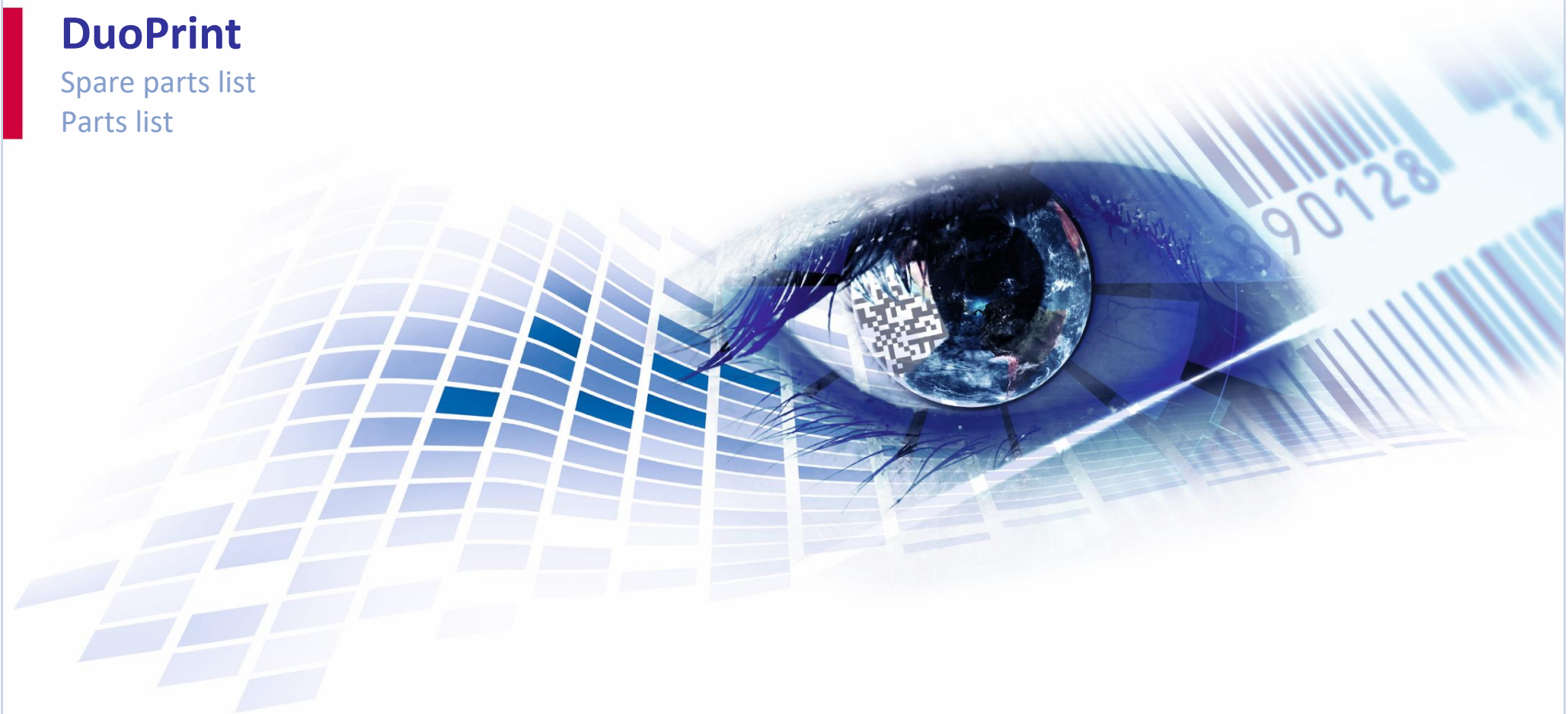

Modifications and errors excepted

Quality . Tradition . Innovation

90.81.100

DUOPRINT 107/12 THERMAL TRANSFER PRINTER KCE

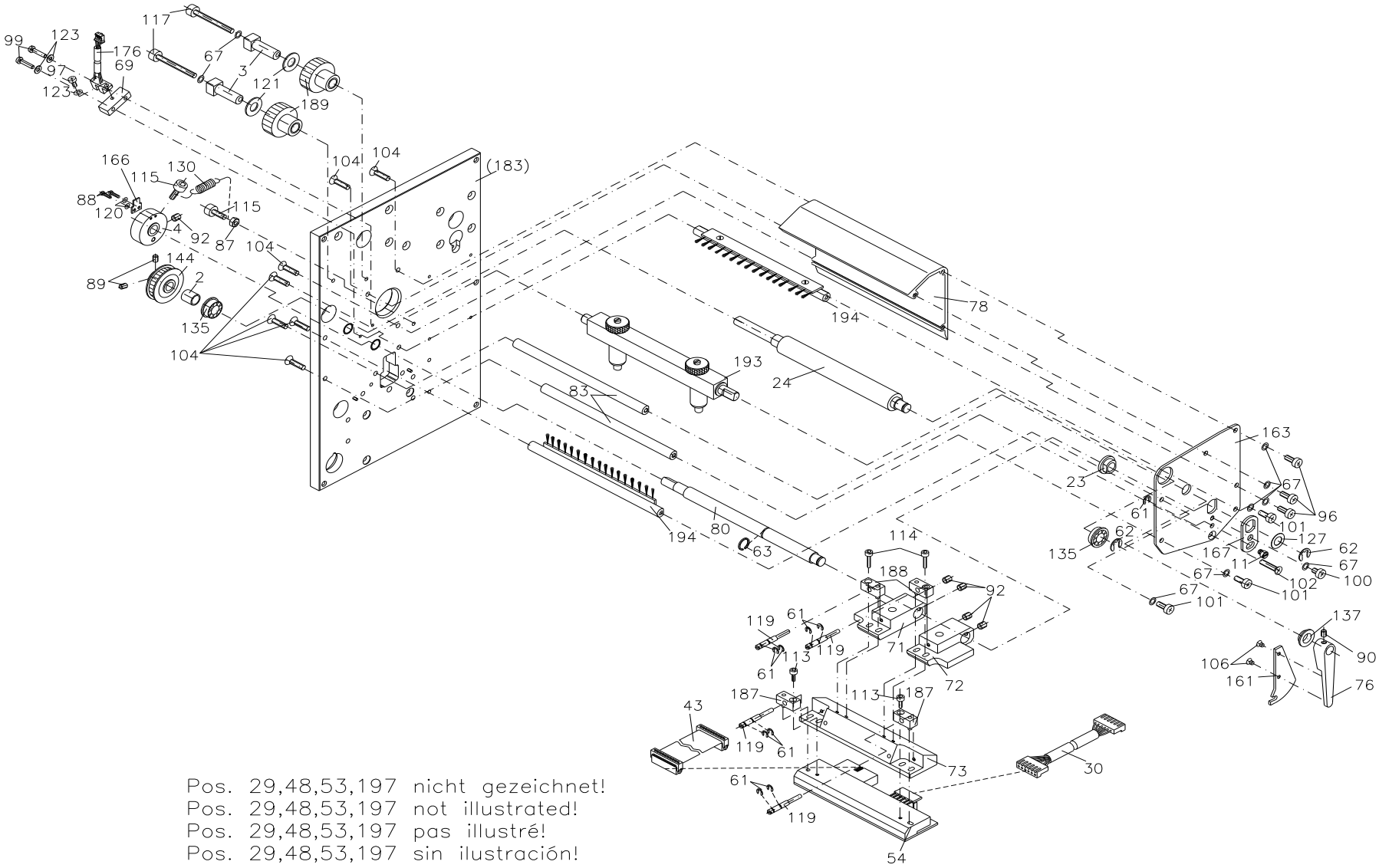

Pos. 29,48,53,197 nicht gezeichnet!
Pos. 29,48,53,197 not illustrated!
Pos. 29,48,53,197 pas illustré!
Pos. 29,48,53,197 sin ilustración!

90.81.100

DUOPRINT 107/12 THERMAL TRANSFER PRINTER KCE

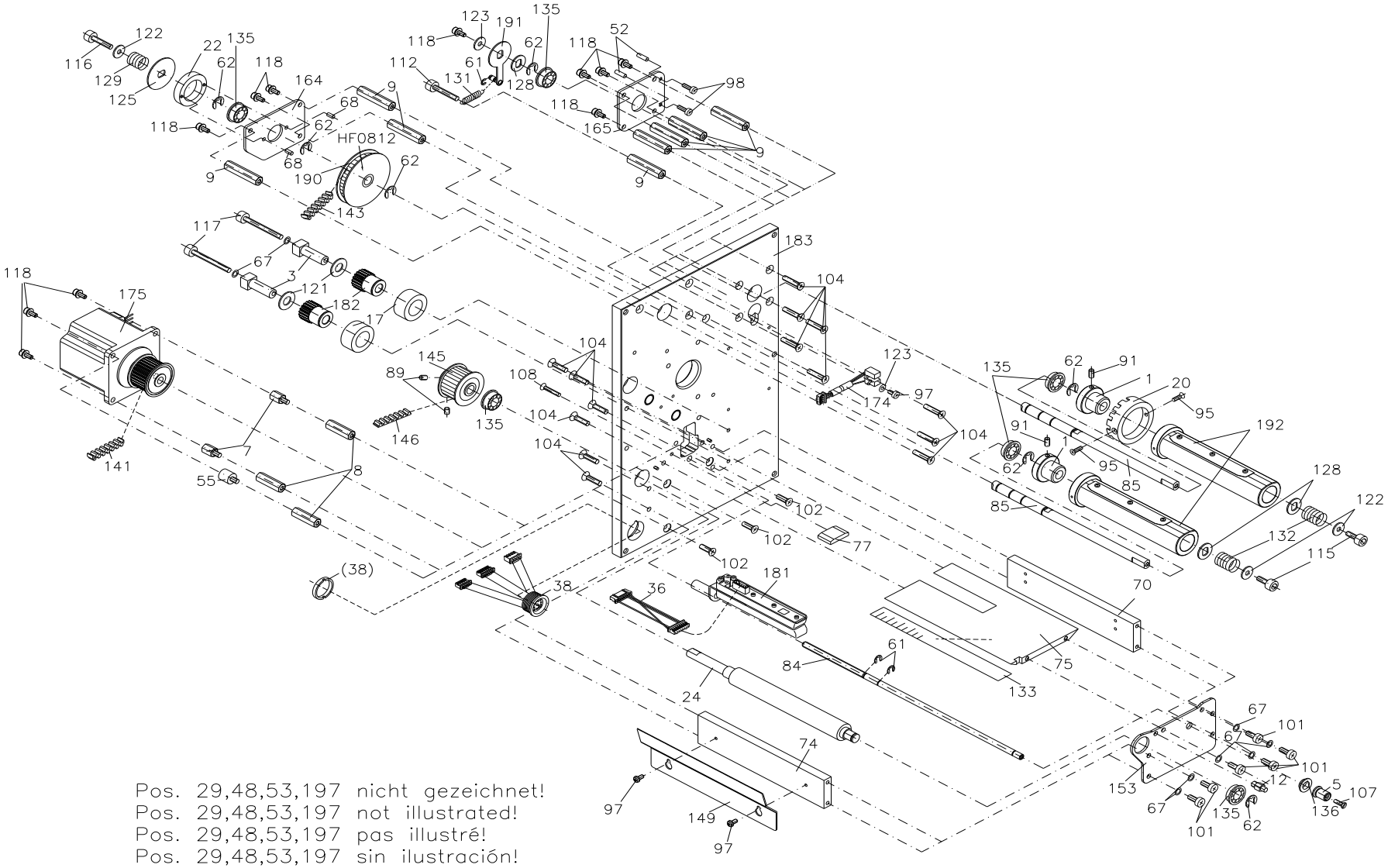

90.81.100

DUOPRINT 107/12 THERMAL TRANSFER PRINTER KCE

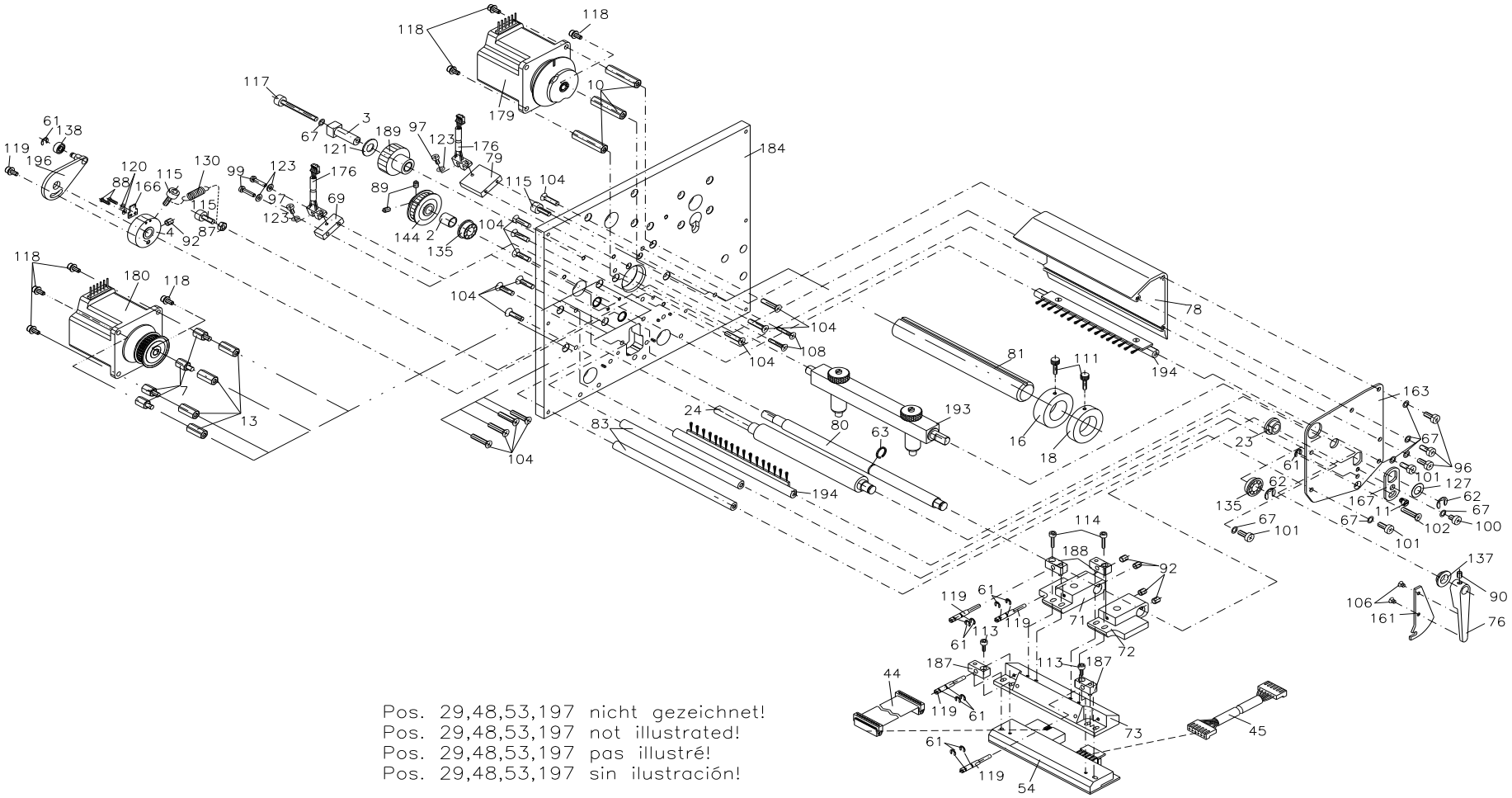

Pos. 29,48,53,197 nicht gezeichnet!
Pos. 29,48,53,197 not illustrated!
Pos. 29,48,53,197 pas illustré!
Pos. 29,48,53,197 sin ilustración!

90.81.100

DUOPRINT 107/12 THERMAL TRANSFER PRINTER KCE

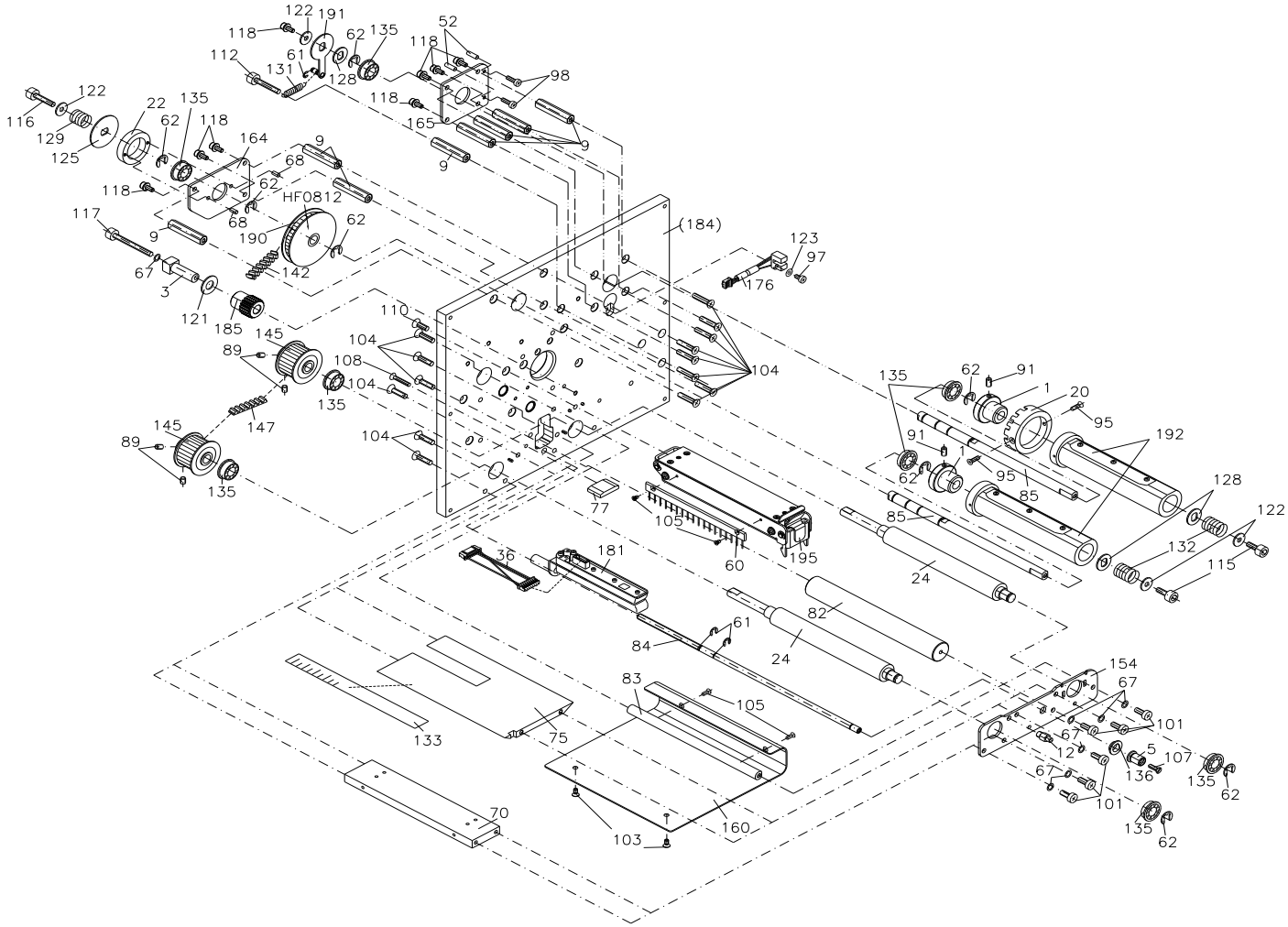

Pos. 29,48,53,197 nicht gezeichnet!
Pos. 29,48,53,197 not illustrated!
Pos. 29,48,53,197 pas illustré!
Pos. 29,48,53,197 sin ilustración!

90.81.100

DUOPRINT 107/12 THERMAL TRANSFER PRINTER KCE

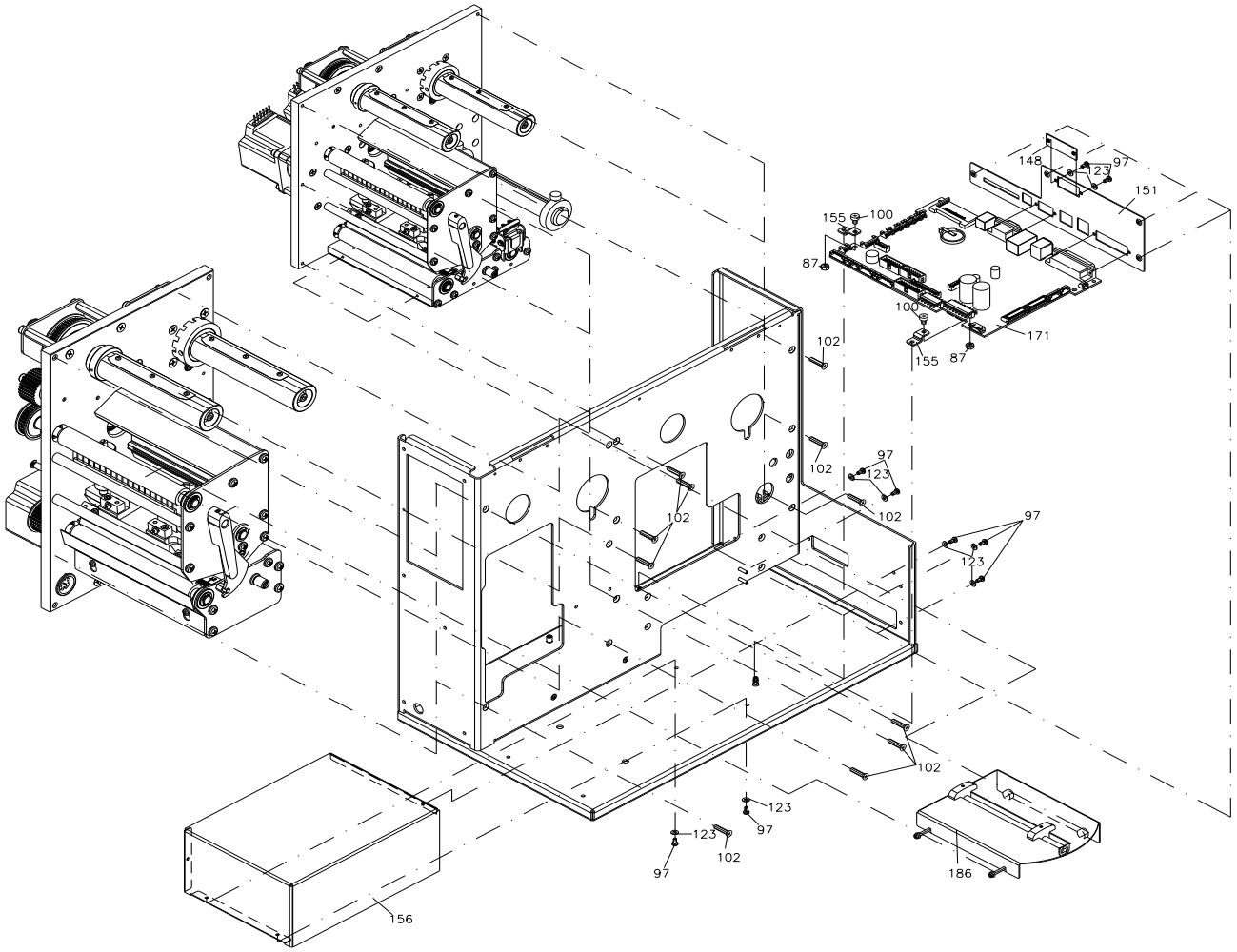

Pos. 29,48,53,197 nicht gezeichnet!
Pos. 29,48,53,197 not illustrated!
Pos. 29,48,53,197 pas illustré!
Pos. 29,48,53,197 sin ilustración!

90.81.100

DUOPRINT 107/12 THERMAL TRANSFER PRINTER KCE

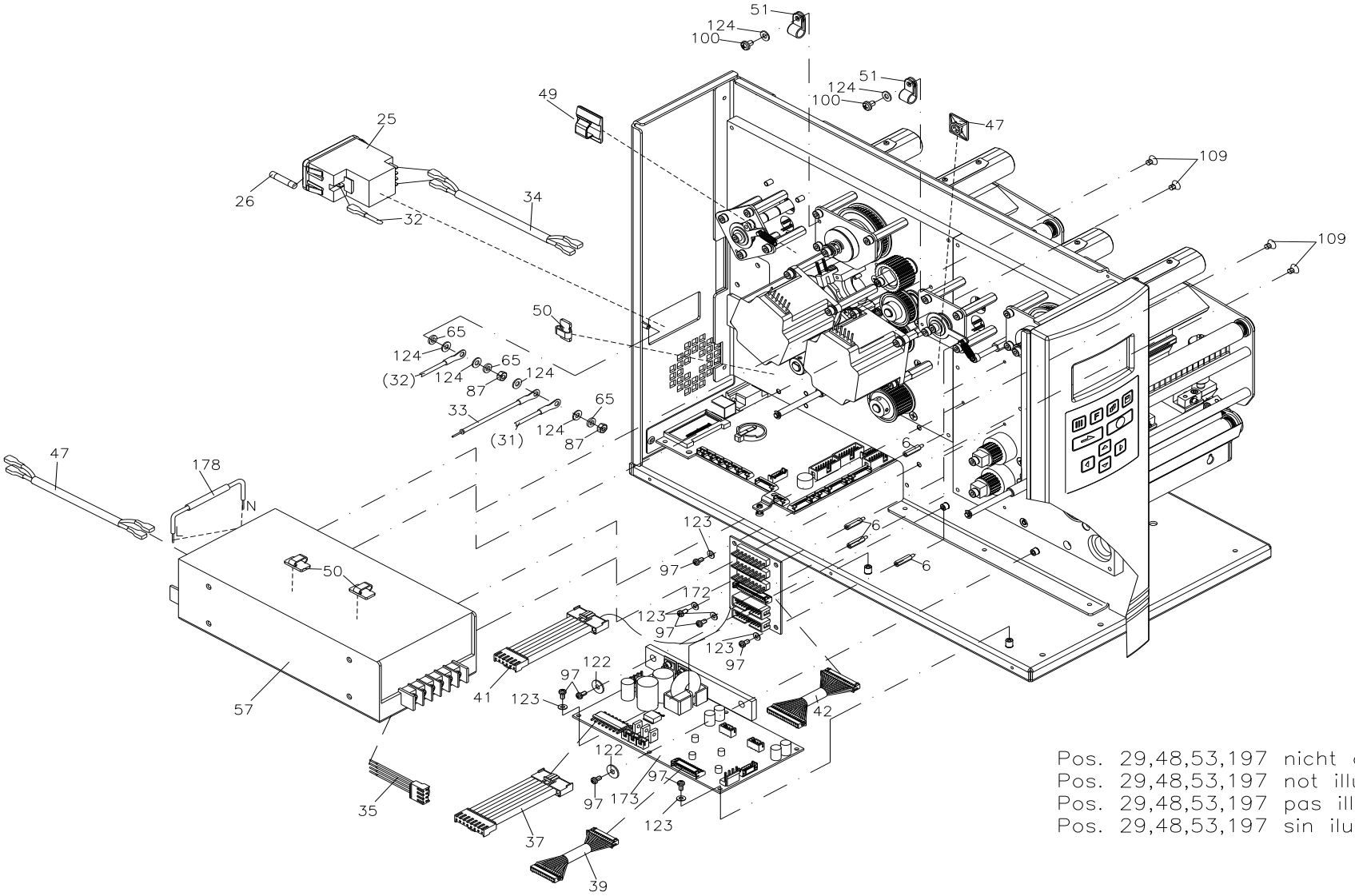

Pos. 29,48,53,197 nicht gezeichnet!
Pos. 29,48,53,197 not illustrated!
Pos. 29,48,53,197 pas illustré!
Pos. 29,48,53,197 sin ilustración!

90.81.100

DUOPRINT 107/12 THERMAL TRANSFER PRINTER KCE

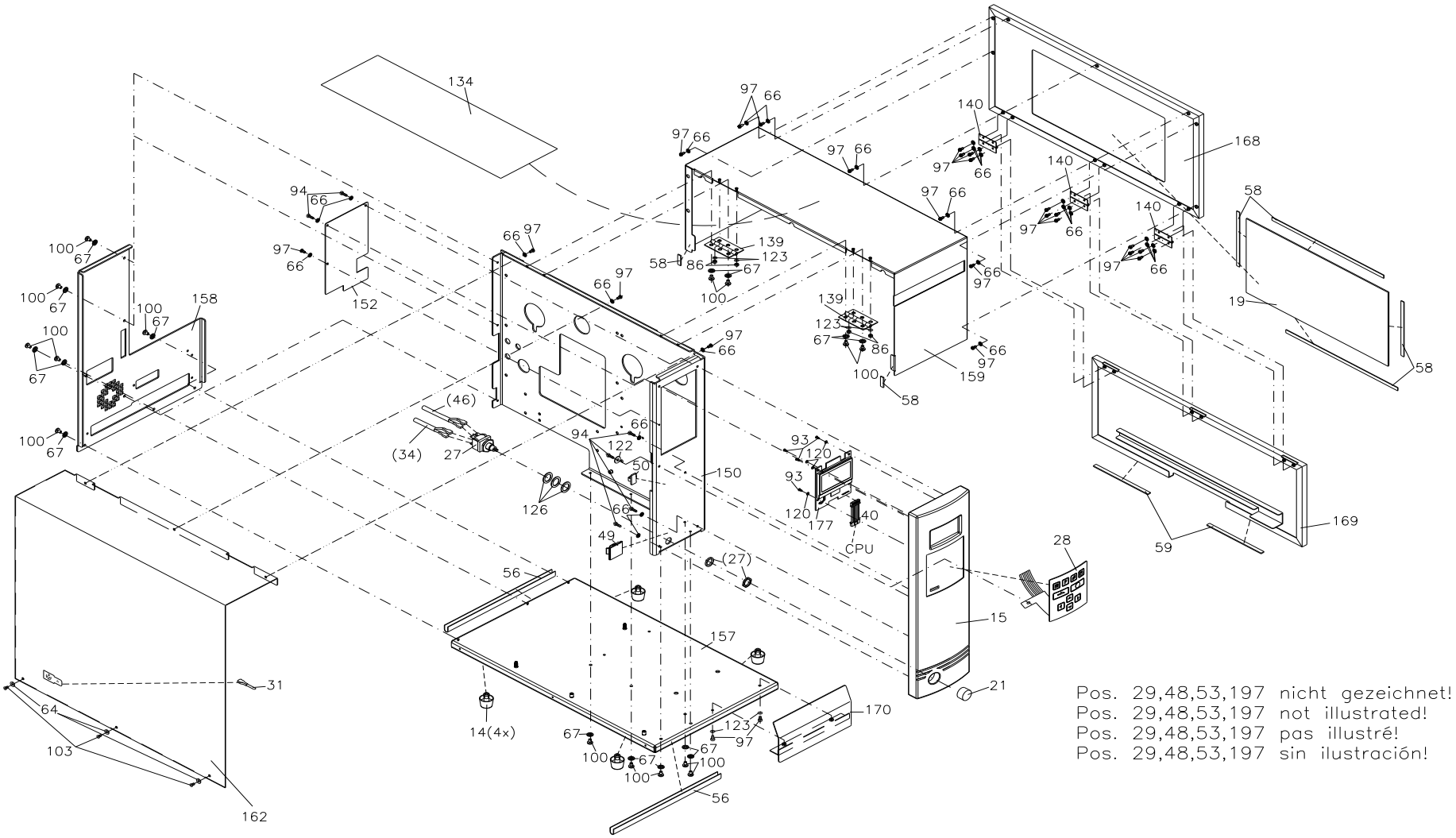

90.81.100

DUOPRINT 107/12 THERMAL TRANSFER PRINTER KCE

Pos	Ident-No.	Description1	Description2	Quantity
1	10.88.001	Bearing bush	Spectra/SPE/DPM/SPX/Vita/Flexicode/ILX/ALP	4
2	10.88.015	Spacer sleeve	Spectra/SPE/Vario/SPX/Vita	2
3*	10.88.020	Eccentric bearing	Spectra/SPE/SPX/Vita/Duoprint/ILX	6
4	10.88.025	Bearing ring	Spectra/SPE/SPX	2
5	10.88.035	Knurled knob	Spectra/SPE/SPX	2
6	12.40.315	Distance bolt M3x15		4
7	12.40.410	Distance bolt M4x10		7
8	12.40.425	DISTANCE BOLT M4 X 25		4
9	12.40.434	Distance bolt M4x34.8		16
10	12.40.440	Distance bolt M4x40		3
11*	12.88.030	Eccentric pin	Spectra/SPE/SPX	2
12	12.88.035	Pin	Spectra/SPE/SPX/Flexicode	2
13	12.88.410	Distance bolt M4x22.3		4
14*	16.01.021	Machine foot, h: 15 mm	Duoprint	4
15	16.81.001	Front panel cpl	Duoprint	1
16	16.81.005	Label guiding, inside	Duoprint/ILX	1
17	16.81.030	Bogie wheel	Duoprint	2
18	16.87.005	Label guiding	SPE/SPX/Duoprint/ILX	1
19	16.88.027	Window	Spectra	1
20	16.88.055	Sprocket wheel	Spectra/SPE/DPM/Vario/SPX/Vita/Flexicode/ALP	2
21	16.88.060	Knob	Spectra/Duoprint	1
22	16.88.065	Brake ring	Spectra/SPE/Vario/SPX/Vita/Eco	2
23	16.88.070	Slide bearing	Spectra/SPE/SPX/ALP	2
24*	18.88.101	Pressure roller	Spectra/SPX/Duoprint 107/ILX 10X/SPE	5
25	23.01.040	Filter		1
26*	24.02.013	Fine-wire fuse 5AT high breaking		1
27*	26.01.032	Power switch	Spectra I	1
28	26.52.005	Foil keyboard	Vita II/Compa II/Duoprint/Spectra LCD	1

*Recommended spare part

90.81.100

DUOPRINT 107/12 THERMAL TRANSFER PRINTER KCE

Pos	Ident-No.	Description1	Description2	Quantity
29	28.04.215	Spiral tube 15 mm	in meters	0,35m
30	28.15.058	printhead cable >power< desco		1
31	28.30.081	Grounded conductor 2	Vario/DPM/SPE/Dynacode/Pica/Flexicode/SPE II	1
32	28.30.089	Grounded conductor 1	Spectra/DPM/SPE/Dynacode/SPX/Vita/Flexicode	1
33	28.30.090	Protective conductor 2	Dynacode/SPX/Vita/Duoprint/Pica II	1
34	28.67.067	Power supply line 730 mm	DPM II "Bein"/Duoprint	1
35	28.81.001	Connecting cable, power supply-power electronics	Duoprint	1
36	28.81.005	Cable for photocell	Duoprint/SPX II	2
37	28.81.010	CONNECTING CABLE		1
38	28.81.015	Bushing cable	Duoprint/Spectra II 1XX	1
39	28.81.020	CONNECTING CABLE		1
40	28.81.030	Connecting cable, control unit-CPU	Duoprint	1
41	28.81.050	Connecting cable, CPU-distributor plate	Duoprint, printhead power	1
42	28.81.060	Connecting cable, CPU-distributor plate	Duoprint, printhead signal	1
43	28.81.093	Printhead cable, data signals 1	Duoprint	1
44	28.81.096	Printhead cable, data signals 2	Duoprint	1
45	28.81.190	PRINT HEAD CABLE POWER		1
46	28.83.015	POWER LINE		1
47	35.01.001	Mounting base self-adhesive 19x19 mm		1
48	35.01.002	Cable joint 100x2.5 mm		6
49	35.01.011	Cord-Clip 8 mm		1
50	35.01.014	Aluminium clip		4
51	35.01.022	Nylon bracket 7.4-8.4 mm		2
52	35.04.004	Tube 3.2 mm, black		0,04m
53	35.04.038	tube 38.1 mm, transparent		0,03m
54*	37.04.1010	Thermal printhead 107-12	Spectra II/SPE II/LPM II/Dynacode/Duoprint	2
55	37.28.010	Vibration absorption	Spectra/SPE/SPX	1
56	37.28.020	Edge protection file	Pica/Spectra, in meters	0,70m

*Recommended spare part

90.81.100

DUOPRINT 107/12 THERMAL TRANSFER PRINTER KCE

Pos	Ident-No.	Description1	Description2	Quantity
57	37.39.600	Power supply	Duoprint/Spectra II/SPX II	1
58	37.68.003	Double sided adhesive tape 9 mm		0,03
59	37.88.001	Rubber-sponge		0,01
60	37.88.101	Antistatic brush	Spectra 10X/SPE/SPX/Vita/Duoprint 107/ALP 10X	1
61	40.01.003	Shaft protection 3.2 mm		25
62	40.01.006	Shaft protection 6 mm		19
63	40.02.010	Protective ring 10 mm		2
64	41.01.007	Rosette 4x9 mm		3
65	41.02.002	Fan shaped washer M4		3
66	41.03.003	Lock washer M3		28
67	41.03.004	Lock washer M4		47
68	42.05.006	Grooved taper pin 3 x 6 mm		4
69	45.81.020	Spacer	Duoprint/SPX II/Spectra II/LPM II/ILX 10X/SPE II	2
70	45.81.115	Strut	Duoprint 107	2
71	45.87.015	Printhead bearing, left	SPE 107/Spectra 107/Spectra 160/Duoprint	2
72	45.87.020	Printhead bearing, right	SPE 107/Spectra 107/Spectra 160/Duoprint	2
73	45.87.110	Printhead bracket	SPE 107/Spectra 107/Duoprint 107	2
74	45.87.115	Strut	SPE/Spectra 107/Duoprint 107/LPM II 10X	1
75	45.87.120	Intermediate plate, right	SPE/Spectra 107/SPX/Duoprint 107/ILX 10X	2
76	45.88.025	Pressure lever	Spectra/SPE/SPX	2
77	45.88.035	Limit stop	Spectra/SPE/SPX/ILX 10X	2
78	45.88.101	Profile, above 140 mm	Spectra/SPE/SPX/ILX 10X	2
79	45.88.405	Spacer	Spectra/SPE	1
80	46.87.101	Printhead shaft, right	SPE 107/Spectra 107/Duoprint 107	2
81	46.87.105	Bearing pillar for label guiding	SPE 10X/SPX/Duoprint 107/LPM II 10X	1
82	46.87.110	Spacer shaft	SPE 104/106/108 "SES"/SPX/Duoprint 107/ILX 10X	1
83	46.88.110	Brush shaft	Spectra/Vita/Duoprint 107	5
84	46.88.115	Straight shaft	Spectra/SPE/SPX/ILX 10X	2

*Recommended spare part

90.81.100

DUOPRINT 107/12 THERMAL TRANSFER PRINTER KCE

Pos	Ident-No.	Description1	Description2	Quantity
85	46.88.120	Ribbon rewinding/unwinding shaft	Spectra/SPE/SPX/Vita/ILX 10X/ALP	4
86	47.04.001	Hexagon nut M3		4
87	47.05.001	Hexagon nut M4		6
88	48.04.208	Screw M2x8		4
89	48.10.005	Setscrew M4x4		10
90	48.10.406	Setscrew M4x6		2
91	48.10.408	Setscrew M4x8		4
92	48.10.505	Setscrew M5x5		10
93	48.13.000	Screw 2.2x6.5		4
94	48.13.001	Screw 2.9x9.5		6
95	48.13.212	Screw 22x4.5		4
96	48.13.410	Screw 40x10		6
97	48.14.306	Pan screw M3x6		49
98	48.14.310	Pan screw M3x10		4
99	48.14.314V	Pan screw M3x14 stainless		4
100	48.14.406	Pan screw M4x6		21
101	48.14.410	Pan screw M4x10		18
102	48.15.002	Pan screw M4x10		16
103	48.15.003	Countersunk screw M3x6		5
104	48.15.004	Countersunk screw M4x16		49
105	48.15.204	Countersunk screw M2.5x4		4
106	48.15.304	Countersunk screw M3x4		4
107	48.15.310	Countersunk screw M3x10		2
108	48.15.316	Countersunk screw M3x16		4
109	48.15.406	Countersunk screw M4 x 6		4
110	48.15.412	Pan screw M4x12		1
111*	48.16.005	Knurled screw M3x12		2
112	48.16.028	Socket cap screw M4x28	Spectra/SPE/Vario	2

*Recommended spare part

90.81.100

DUOPRINT 107/12 THERMAL TRANSFER PRINTER KCE

Pos	Ident-No.	Description1	Description2	Quantity
113	48.16.312	Socket cap screw M3x12		4
114	48.16.316	Socket cap screw M3x16		4
115	48.16.412	Socket cap screw M4x12		9
116	48.16.420	Socket cap screw M4x20		2
117	48.16.440	Socket cap screw M4x40		6
118	48.26.410V	Screw-and-washer assembly M4x10		27
119	48.87.010	Adjusting screw	SPE/Spectra 107/Spectra 160/Duoprint	8
120	50.01.009	Lock washer 5x2x0.3		4
121	50.01.012	Lock washer 18x8.15x1.0 stainless		8
122	50.01.046	Lock washer M4		11
123	50.01.057	Lock washer 3.2		30
124	50.01.065	Lock washer 4.3		6
125	50.15.005	Brake washer	Spectra/Vario/Vita/ILX/Duoprint, only replacement	2
126	50.51.310	Washer 13x19x1.0		3
127	50.55.001	Washer 8x14x0.5		2
128*	50.88.001	Striker arm plate	Spectra/SPE/SPX/DPM III+IV/Vario II/Vita/FC/ALP	4
129	52.01.010	Compression spring	Solo/Vario/Spectra/Vita	2
130	52.02.047	Tension spring	Desco/Spectra/SPE/SPX/ILX	2
131*	52.55.010	Tension spring		2
132*	52.88.005	Compression spring	Spectra/DPM/SPE/Vario/SPX/Vita/Flexicode/ALP	4
133	55.10.001	Self-adhesive scale		2
134	55.81.005	COVER FOIL FOR DUOPRINT		1
135*	57.01.007	Grooved ball bearing		18
136*	57.02.105	Bearing	Spectra	2
137*	57.02.108	Bearing	Spectra	2
138*	57.03.010	Grooved ball bearing		1
139	57.88.001	Hinge		2
140	57.88.005	Hinge		3

*Recommended spare part

90.81.100

DUOPRINT 107/12 THERMAL TRANSFER PRINTER KCE

Pos	Ident-No.	Description1	Description2	Quantity
141	59.74.433	Toothed belt	ILX/Duoprint	1
142*	59.87.340	Toothed belt	SPE/Duoprint/ALP	1
143*	59.87.481	Toothed belt	SPE/Spectra107/Spectra 160/Duoprint/ILX 10X	1
144	59.88.032	Toothed belt wheel	Spectra/SPE/SPX/Vita/Flexicode/ALP	2
145	59.88.033	Toothed belt wheel	Spectra/SPE/SPX/Vita/ILX	3
146*	59.88.225	Toothed belt	Spectra	1
147*	59.88.300	Toothed belt	Spectra/Vita/ILX 10X	1
148	67.48.035	Interface cover	Vita II/Compa II/Pica II/Duop/Vario III/Spectra II	1
149	67.48.130	Tear-off edge	Vita/Duoprint 107/Spectra II 10X	1
150	67.81.003	Chassis base	Duoprint 107/Duoprint 160	1
151	67.81.010	GUSSET		1
152	67.81.015	COVER PLATE		1
153	67.81.022	SOLE PLATE BELOW		1
154	67.81.032	SOLE PLATE BELOW		1
155	67.81.050	SUPPORTING PLATE		2
156	67.81.055	COVER CPU		1
157	67.81.101	Base plate	Duoprint 107	1
158	67.81.105	BACK PANEL		1
159	67.81.112	Cover, right	Duoprint 107	1
160	67.81.140	COVER PLATE		1
161	67.87.035	Cross bar, right	SPE/Spectra107/Spectra 160/Duoprint	2
162	67.88.005	Cover, left	Spectra 10X/Spectra 16X/Spectra 216/Duoprint	1
163	67.88.017	Sole plate, above	Spectra 107/Spectra 160/Duoprint	2
164	67.88.030	Sole plate ribbon rewinder	Spectra/Spectra II/SPE/Vario/SPX/Vita	2
165	67.88.035	Sole plate ribbon unwinder	Spectra/SPE/SPX/Vita/ILX	2
166	67.88.065	Circuit plate	Spectra/SPE/SPX	2
167	67.88.080	Adjusting plate	Spectra/SPE/SPX	2
168	67.88.090	Cover, right (part of window)	Spectra 107/108/106/162/216/Duoprint	1

*Recommended spare part

90.81.100

DUOPRINT 107/12 THERMAL TRANSFER PRINTER KCE

Pos	Ident-No.	Description1	Description2	Quantity
169	67.88.095	Cover, right (base part)	Spectra 107/108/106/162/216/Duoprint	1
170	67.88.120	Front sheet	Spectra 107/Spectra 108/Duoprint 107	1
171	70.81.001	CPU cpl	Duoprint	1
172	70.81.010	Distributor plate printhead	Duoprint	1
173	70.81.400	Power electronics	Duoprint	1
174	71.81.005	Ribbon photcell cpl		1
175	71.81.010	Stepper motor feed cpl	Duoprint	1
176	71.81.015	Photocell printhead/ribbon/ribbon saving		4
177	71.81.030	Control unit cpl		1
178	71.81.050	Discharge-resistor	Duoprint	1
179	71.81.401	Stepper motor for ribbon saving		1
180	71.81.701	Stepper motor for transfer ribbon cpl	Duoprint	1
181*	71.83.018	Label photocell	transmission above+reflexion below	2
182	72.48.019	Toothed belt wheel cpl	Vita/ILX/Duoprint	2
183	72.81.007	Carrier plate cpl	Duoprint 107/Duoprint 160	1
184	72.81.017	Carrier plate behind cpl	Duoprint 107/Duoprint 160	1
185	72.81.019	Toothed belt wheel cpl	Duoprint	1
186	72.81.120	Label guiding cpl	Duoprint 107	1
187	72.87.010	Adjusting device cpl	SPE 107/SPE 160/Spectra 107/Spectra 160/Duoprint	4
188	72.87.012	Adjusting device cpl	SPE 107/SPE 160/Spectra 107/Spectra 160/Duoprint	4
189*	72.88.034	Toothed belt wheel cpl	Spectra/SPE/SPX/Vita/ILX 10X	3
190*	72.88.048	Toothed belt wheel cpl	Spectra/SPE/Vario/SPX/Vita/Flexicode/ILX/ALP	2
191	72.88.070	Backfeed plate cpl	Spectra/SPE/DPM III/Vario/SPX/Vita/ILX/ALP	2
192*	72.88.101	Ribbon rewinding/unwinding roller cpl	Spectra/DPM III/SPE/Vario/SPX/Vita/ILX 10X, right	4
193	72.88.105	Pressure shaft cpl	Spectra 107/108/Duoprint/SPE/SPX/ILX 10X right	2
194	72.88.110	Brush shaft cpl	Spectra 107/Spectra 108/Vita/Duoprint 108	4
195	72.88.401	Washer cpl	Spectra/SPE/Duoprint 107/LPM II 10X	1
196	72.88.425	Sole plate ribbon saving cpl	Spectra/SPE/Duoprint	1

*Recommended spare part

90.81.100

DUOPRINT 107/12 THERMAL TRANSFER PRINTER KCE

Pos	Ident-No.	Description1	Description2	Quantity
197	98.04.340	Slot screwdriver Wiha 5003.0x40		1

*Recommended spare part

90.81.110

DUOPRINT 107/12 THERMAL TRANSFER PRINTER KCE INCLUDING PA80

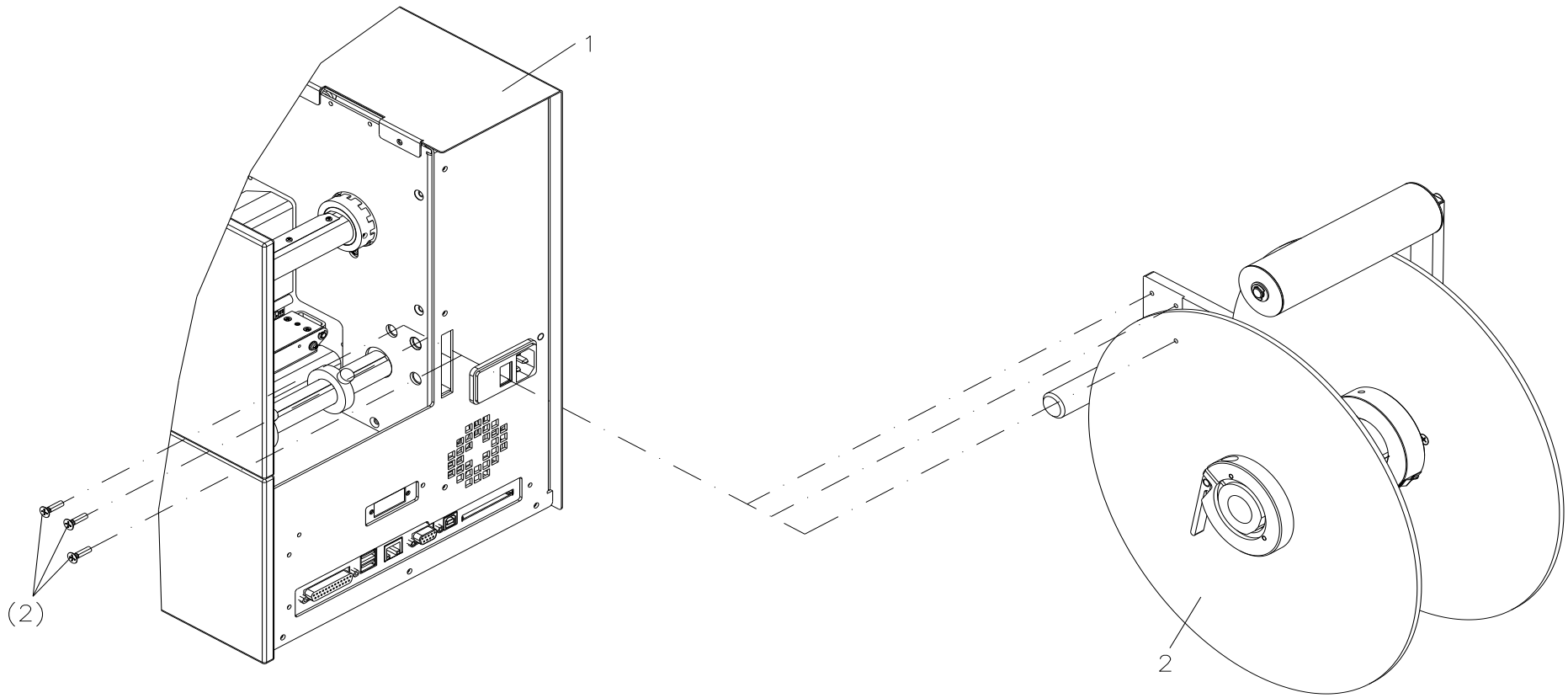

90.81.110

DUOPRINT 107/12 THERMAL TRANSFER PRINTER KCE
INCLUDING PA80

Pos	Ident-No.	Description1	Description2	Quantity
1	90.81.100	Duoprint 107/12 thermal transfer printer KCE		1
2	92.81.100	Unwinder PA 80	Duoprint 107	1

*Recommended spare part

90.81.300

DUOPRINT 160/12 THERMAL TRANSFER PRINTER KCE

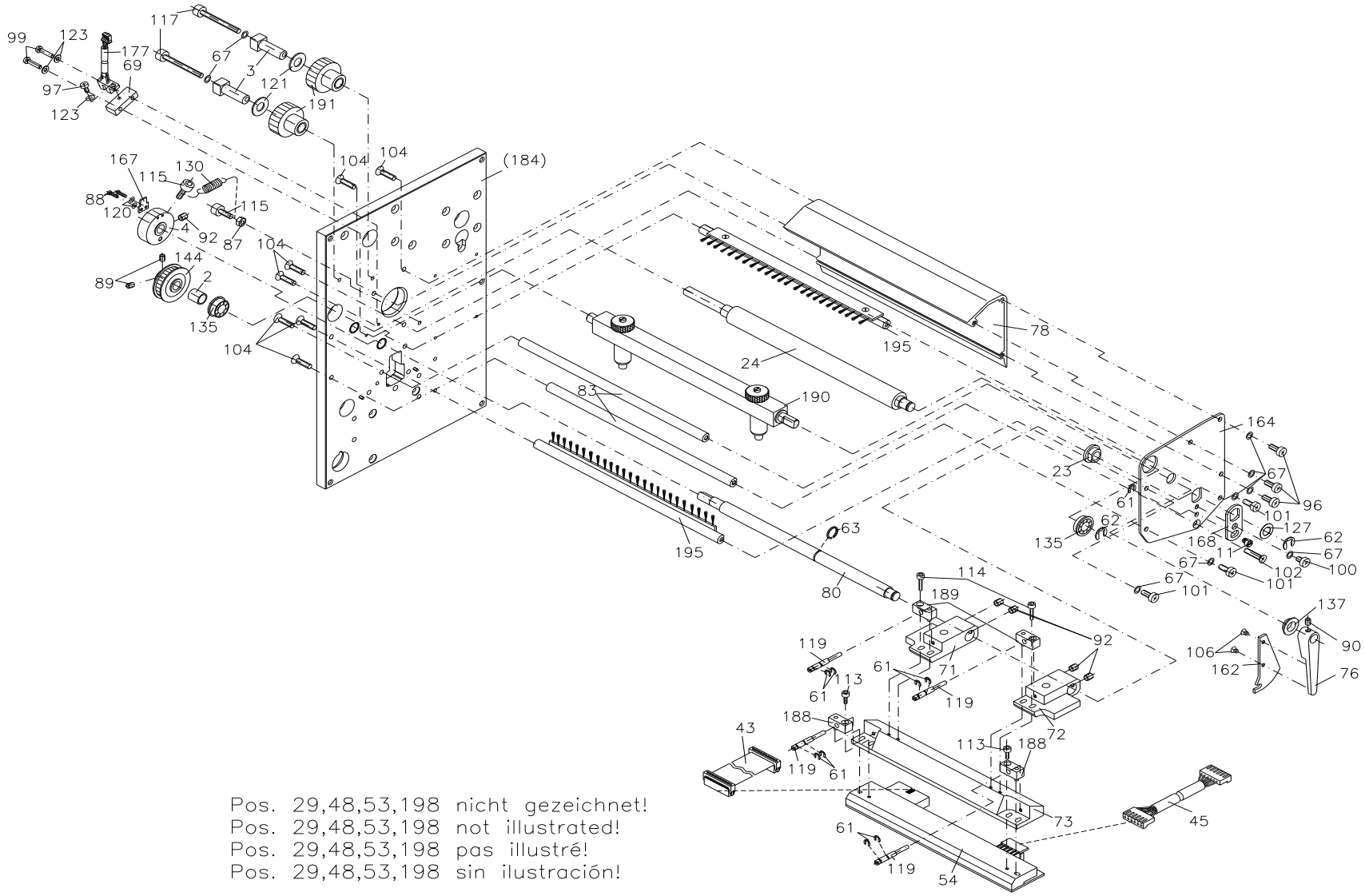

Pos. 29,48,53,198 nicht gezeichnet!
Pos. 29,48,53,198 not illustrated!
Pos. 29,48,53,198 pas illustré!
Pos. 29,48,53,198 sin ilustración!

90.81.300

DUOPRINT 160/12 THERMAL TRANSFER PRINTER KCE

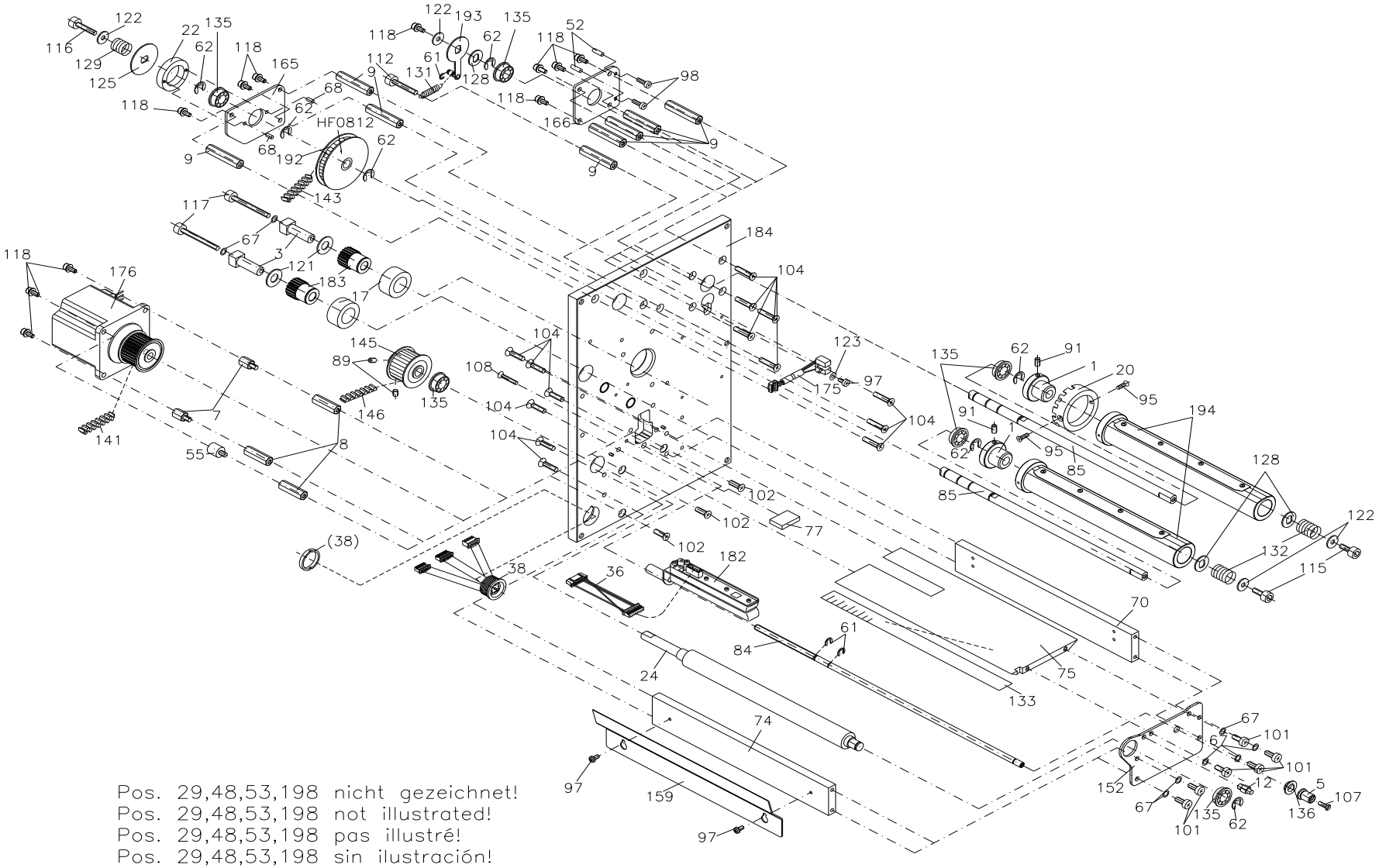

90.81.300

DUOPRINT 160/12 THERMAL TRANSFER PRINTER KCE

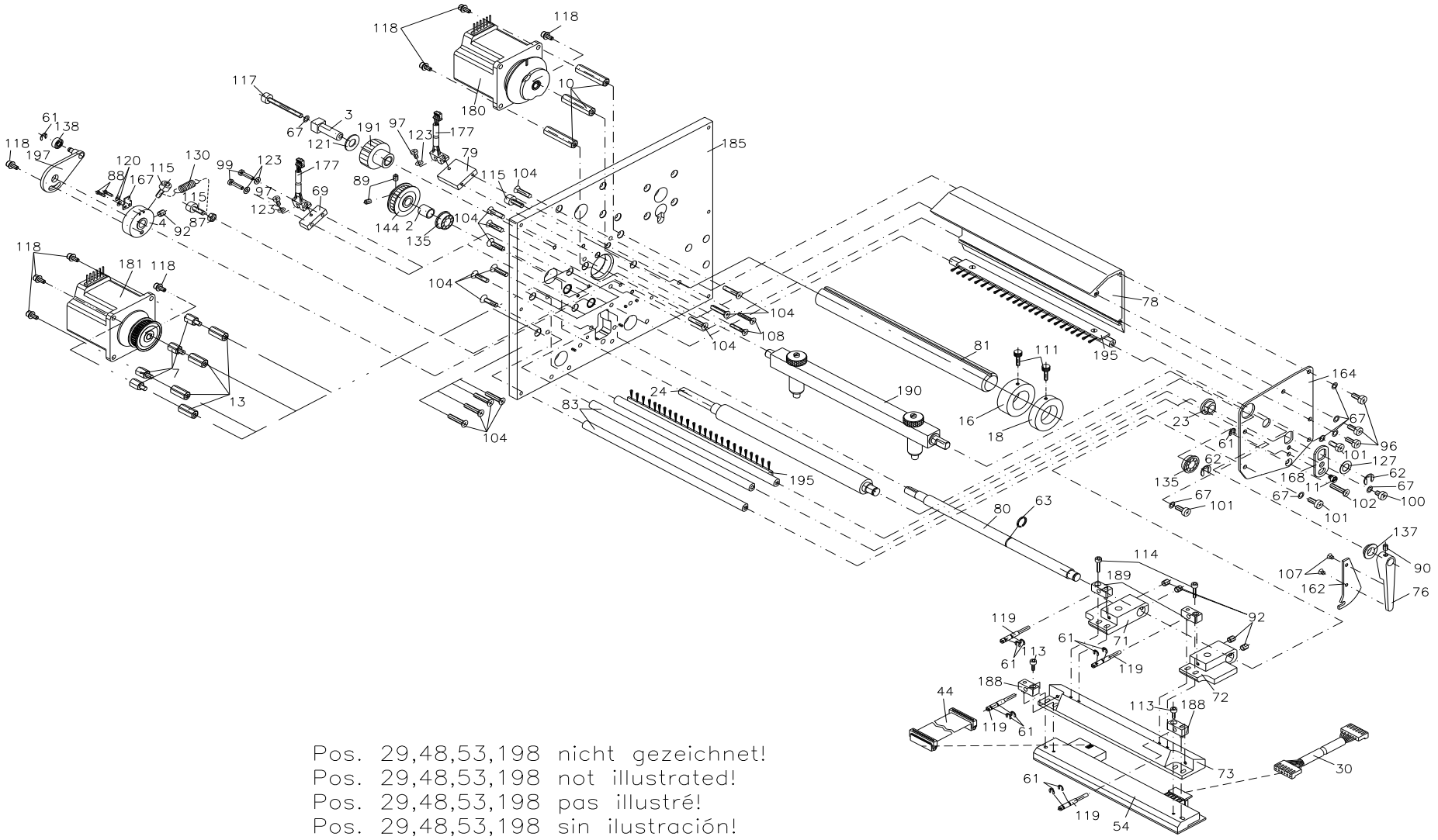

90.81.300

DUOPRINT 160/12 THERMAL TRANSFER PRINTER KCE

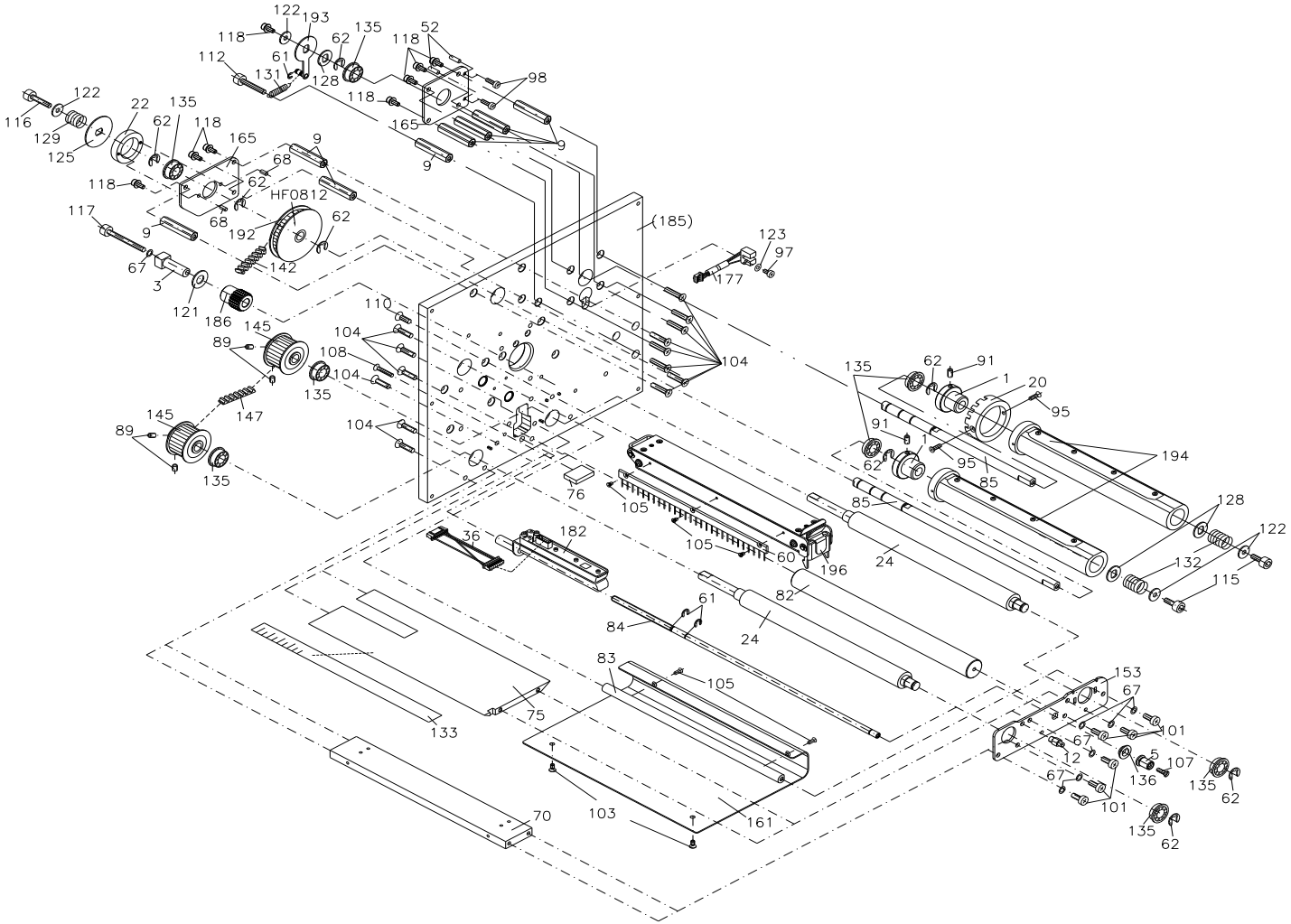

Pos. 29,48,53,198 nicht gezeichnet!
Pos. 29,48,53,198 not illustrated!
Pos. 29,48,53,198 pas illustré!
Pos. 29,48,53,198 sin ilustración!

90.81.300

DUOPRINT 160/12 THERMAL TRANSFER PRINTER KCE

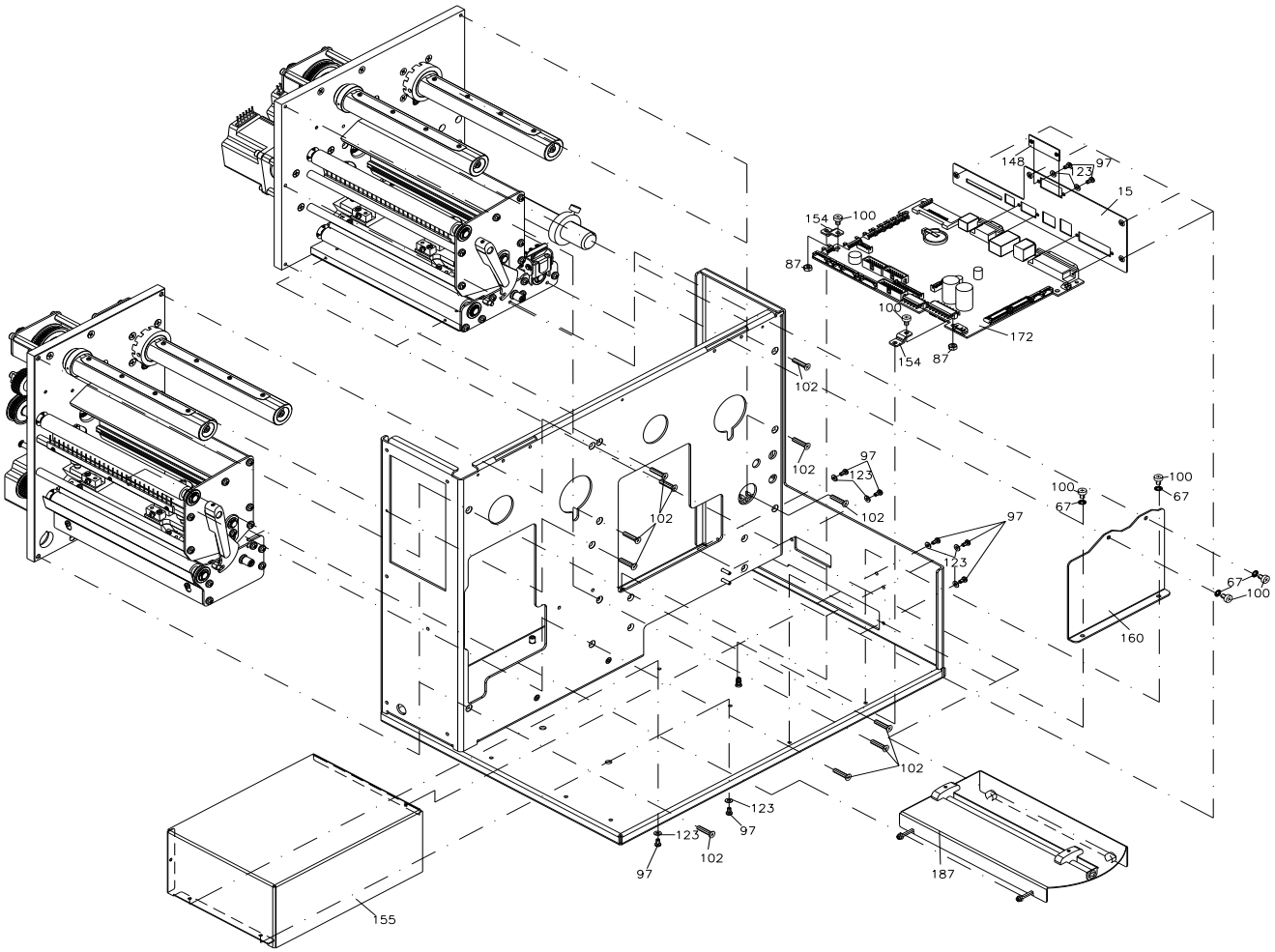

Pos. 29,48,53,198 nicht gezeichnet!
Pos. 29,48,53,198 not illustrated!
Pos. 29,48,53,198 pas illustré!
Pos. 29,48,53,198 sin ilustración!

90.81.300

DUOPRINT 160/12 THERMAL TRANSFER PRINTER KCE

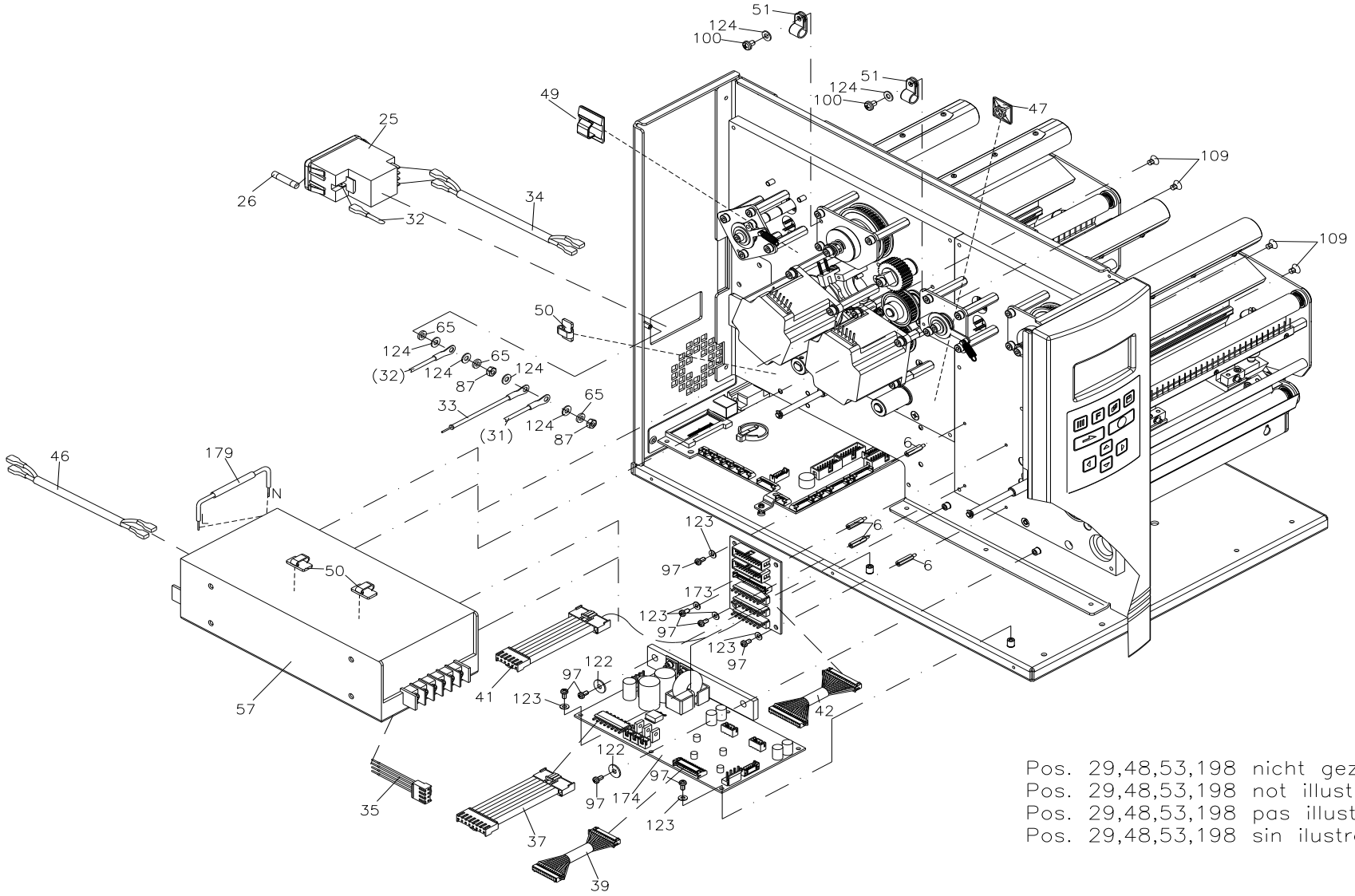

Pos. 29,48,53,198 nicht gezeichnet!
Pos. 29,48,53,198 not illustrated!
Pos. 29,48,53,198 pas illustré!
Pos. 29,48,53,198 sin ilustración!

90.81.300

DUOPRINT 160/12 THERMAL TRANSFER PRINTER KCE

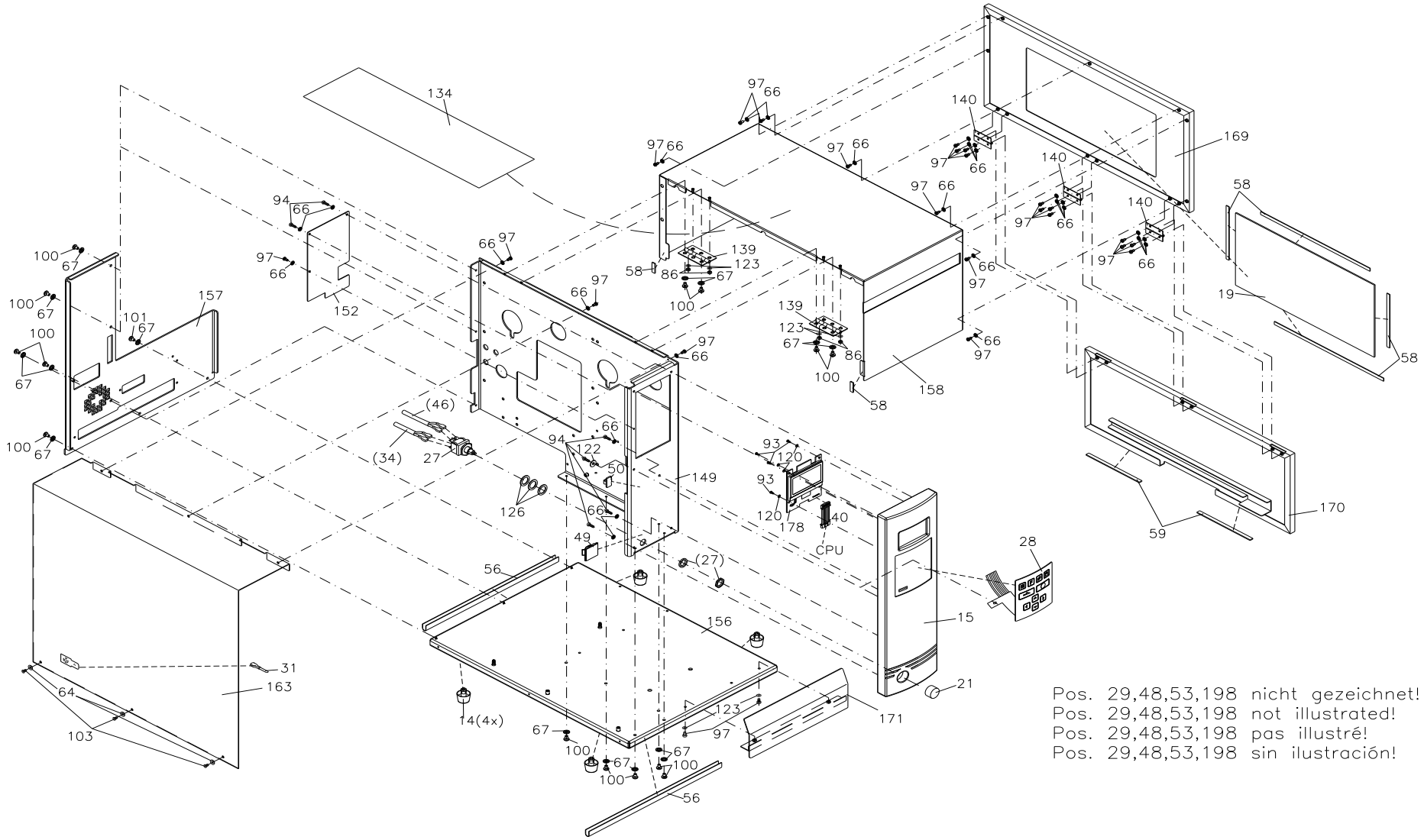

90.81.300

DUOPRINT 160/12 THERMAL TRANSFER PRINTER KCE

Pos	Ident-No.	Description1	Description2	Quantity
1	10.88.001	Bearing bush	Spectra/SPE/DPM/SPX/Vita/Flexicode/ILX/ALP	4
2	10.88.015	Spacer sleeve	Spectra/SPE/Vario/SPX/Vita	2
3*	10.88.020	Eccentric bearing	Spectra/SPE/SPX/Vita/Duoprint/ILX	6
4	10.88.025	Bearing ring	Spectra/SPE/SPX	2
5	10.88.035	Knurled knob	Spectra/SPE/SPX	2
6	12.40.315	Distance bolt M3x15		4
7	12.40.410	Distance bolt M4x10		7
8	12.40.425	DISTANCE BOLT M4 X 25		4
9	12.40.434	Distance bolt M4x34.8		16
10	12.40.440	Distance bolt M4x40		3
11*	12.88.030	Eccentric pin	Spectra/SPE/SPX	2
12	12.88.035	Pin	Spectra/SPE/SPX/Flexicode	2
13	12.88.410	Distance bolt M4x22.3		4
14*	16.01.021	Machine foot, h: 15 mm	Duoprint	4
15	16.81.001	Front panel cpl	Duoprint	1
16	16.81.005	Label guiding, inside	Duoprint/ILX	1
17	16.81.030	Bogie wheel	Duoprint	2
18	16.87.005	Label guiding	SPE/SPX/Duoprint/ILX	1
19	16.88.027	Window	Spectra	1
20	16.88.055	Sprocket wheel	Spectra/SPE/DPM/Vario/SPX/Vita/Flexicode/ALP	2
21	16.88.060	Knob	Spectra/Duoprint	1
22	16.88.065	Brake ring	Spectra/SPE/Vario/SPX/Vita/Eco	2
23	16.88.070	Slide bearing	Spectra/SPE/SPX/ALP	2
24*	18.88.201	Pressure roller	Duoprint 160/Spectra 162/Spectra 160/SPE	5
25	23.01.040	Filter		1
26*	24.02.013	Fine-wire fuse 5AT high breaking		1
27*	26.01.032	Power switch	Spectra I	1
28	26.52.005	Foil keyboard	Vita II/Compa II/Duoprint/Spectra LCD	1

*Recommended spare part

90.81.300

DUOPRINT 160/12 THERMAL TRANSFER PRINTER KCE

Pos	Ident-No.	Description1	Description2	Quantity
29	28.04.215	Spiral tube 15 mm	in meters	0,35m
30*	28.15.051	Printhead cable, power supply	Desco/Vario II/Spectra 160/216/Duoprint 160	1
31	28.30.081	Grounded conductor 2	Vario/DPM/SPE/Dynacode/Pica/Flexicode/SPE II	1
32	28.30.089	Grounded conductor 1	Spectra/DPM/SPE/Dynacode/SPX/Vita/Flexicode	1
33	28.30.090	Protective conductor 2	Dynacode/SPX/Vita/Duoprint/Pica II	1
34	28.67.067	Power supply line 730 mm	DPM II "Bein"/Duoprint	1
35	28.81.001	Connecting cable, power supply-power electronics	Duoprint	1
36	28.81.005	Cable for photocell	Duoprint/SPX II	2
37	28.81.010	CONNECTING CABLE		1
38	28.81.015	Bushing cable	Duoprint/Spectra II 1XX	1
39	28.81.020	CONNECTING CABLE		1
40	28.81.030	Connecting cable, control unit-CPU	Duoprint	1
41	28.81.050	Connecting cable, CPU-distributor plate	Duoprint, printhead power	1
42	28.81.060	Connecting cable, CPU-distributor plate	Duoprint, printhead signal	1
43	28.81.093	Printhead cable, data signals 1	Duoprint	1
44	28.81.096	Printhead cable, data signals 2	Duoprint	1
45	28.81.290	Printhead cable, power supply	Duoprint 160	1
46	28.83.015	POWER LINE		1
47	35.01.001	Mounting base self-adhesive 19x19 mm		1
48	35.01.002	Cable joint 100x2.5 mm		6
49	35.01.011	Cord-Clip 8 mm		1
50	35.01.014	Aluminium clip		4
51	35.01.022	Nylon bracket 7.4-8.4 mm		2
52	35.04.004	Tube 3.2 mm, black		0,04m
53	35.04.038	tube 38.1 mm, transparent		0,03m
54*	37.04.1600	Thermal printhead 160-12	Spectra II/SPE II/LPM II/Duoprint	2
55	37.28.010	Vibration absorption	Spectra/SPE/SPX	1
56	37.28.020	Edge protection file	Pica/Spectra, in meters	0,70m

*Recommended spare part

90.81.300

DUOPRINT 160/12 THERMAL TRANSFER PRINTER KCE

Pos	Ident-No.	Description1	Description2	Quantity
57	37.39.600	Power supply	Duoprint/Spectra II/SPX II	1
58	37.68.003	Double sided adhesive tape 9 mm		0,03
59	37.88.001	Rubber-sponge		0,01
60	37.88.201	Antistatic brush	Spectra 160/Spectra 162/SPE/Duoprint 160	1
61	40.01.003	Shaft protection 3.2 mm		25
62	40.01.006	Shaft protection 6 mm		19
63	40.02.010	Protective ring 10 mm		2
64	41.01.007	Rosette 4x9 mm		3
65	41.02.002	Fan shaped washer M4		3
66	41.03.003	Lock washer M3		28
67	41.03.004	Lock washer M4		51
68	42.05.006	Grooved taper pin 3 x 6 mm		4
69	45.81.020	Spacer	Duoprint/SPX II/Spectra II/LPM II/ILX 10X/SPE II	2
70	45.81.215	Strut	Duoprint 160	2
71	45.87.015	Printhead bearing, left	SPE 107/Spectra 107/Spectra 160/Duoprint	2
72	45.87.020	Printhead bearing, right	SPE 107/Spectra 107/Spectra 160/Duoprint	2
73	45.87.210	Printhead bracket	SPE 160/Spectra 160/Duoprint 160	2
74	45.87.215	Strut	SPE 160/Spectra 160/Duoprint 160	1
75	45.87.220	INTERMEDIATE PLATE		2
76	45.88.025	Pressure lever	Spectra/SPE/SPX	2
77	45.88.035	Limit stop	Spectra/SPE/SPX/ILX 10X	2
78	45.88.201	Profile, above 200 mm	Spectra 16X/SPE 160/SPX 162/Duoprint 160	2
79	45.88.405	Spacer	Spectra/SPE	1
80	46.87.201	Printhead shaft, right	SPE 160, right/Spectra 160/Duoprint 160	2
81	46.87.205	Bearing pillar for label guiding	SPE/SPX 162/Duoprint 160/LPM II 16X	1
82	46.87.210	Spacer shaft	SPE 162/SPX 162/Duoprint 160	1
83	46.88.210	Brush shaft	Spectra 160/Spectra 162/Duoprint 160	5
84	46.88.215	Straight shaft	Duoprint 160/LPM II 16X	2

*Recommended spare part

90.81.300

DUOPRINT 160/12 THERMAL TRANSFER PRINTER KCE

Pos	Ident-No.	Description1	Description2	Quantity
85	46.88.220	Ribbon rewinding/unwinding shaft	Spectra 16X/SPE 160/SPX 162/Duopr 160/LPM II 16X	4
86	47.04.001	Hexagon nut M3		4
87	47.05.001	Hexagon nut M4		6
88	48.04.208	Screw M2x8		4
89	48.10.005	Setscrew M4x4		10
90	48.10.406	Setscrew M4x6		2
91	48.10.408	Setscrew M4x8		4
92	48.10.505	Setscrew M5x5		10
93	48.13.000	Screw 2.2x6.5		4
94	48.13.001	Screw 2.9x9.5		6
95	48.13.212	Screw 22x4.5		4
96	48.13.410	Screw 40x10		6
97	48.14.306	Pan screw M3x6		49
98	48.14.310	Pan screw M3x10		4
99	48.14.314V	Pan screw M3x14 stainless		4
100	48.14.406	Pan screw M4x6		25
101	48.14.410	Pan screw M4x10		18
102	48.15.002	Pan screw M4x10		16
103	48.15.003	Countersunk screw M3x6		5
104	48.15.004	Countersunk screw M4x16		49
105	48.15.204	Countersunk screw M2.5x4		5
106	48.15.304	Countersunk screw M3x4		4
107	48.15.310	Countersunk screw M3x10		2
108	48.15.316	Countersunk screw M3x16		4
109	48.15.406	Countersunk screw M4 x 6		4
110	48.15.412	Pan screw M4x12		1
111*	48.16.005	Knurled screw M3x12		2
112	48.16.028	Socket cap screw M4x28	Spectra/SPE/Vario	2

*Recommended spare part

90.81.300

DUOPRINT 160/12 THERMAL TRANSFER PRINTER KCE

Pos	Ident-No.	Description1	Description2	Quantity
113	48.16.312	Socket cap screw M3x12		4
114	48.16.316	Socket cap screw M3x16		4
115	48.16.412	Socket cap screw M4x12		9
116	48.16.420	Socket cap screw M4x20		2
117	48.16.440	Socket cap screw M4x40		6
118	48.26.410V	Screw-and-washer assembly M4x10		27
119	48.87.010	Adjusting screw	SPE/Spectra 107/Spectra 160/Duoprint	8
120	50.01.009	Lock washer 5x2x0.3		8
121	50.01.012	Lock washer 18x8.15x1.0 stainless		8
122	50.01.046	Lock washer M4		11
123	50.01.057	Lock washer 3.2		30
124	50.01.065	Lock washer 4.3		6
125	50.15.005	Brake washer	Spectra/Vario/Vita/ILX/Duoprint, only replacement	2
126	50.51.310	Washer 13x19x1.0		3
127	50.55.001	Washer 8x14x0.5		2
128*	50.88.001	Striker arm plate	Spectra/SPE/SPX/DPM III+IV/Vario II/Vita/FC/ALP	4
129	52.01.010	Compression spring	Solo/Vario/Spectra/Vita	2
130	52.02.047	Tension spring	Desco/Spectra/SPE/SPX/ILX	2
131*	52.55.010	Tension spring		2
132*	52.88.005	Compression spring	Spectra/DPM/SPE/Vario/SPX/Vita/Flexicode/ALP	4
133	55.10.001	Self-adhesive scale		2
134	55.81.005	COVER FOIL FOR DUOPRINT		1
135*	57.01.007	Grooved ball bearing		18
136*	57.02.105	Bearing	Spectra	2
137*	57.02.108	Bearing	Spectra	2
138*	57.03.010	Grooved ball bearing		1
139	57.88.001	Hinge		2
140	57.88.005	Hinge		3

*Recommended spare part

90.81.300

DUOPRINT 160/12 THERMAL TRANSFER PRINTER KCE

Pos	Ident-No.	Description1	Description2	Quantity
141	59.74.433	Toothed belt	ILX/Duoprint	1
142*	59.87.340	Toothed belt	SPE/Duoprint/ALP	1
143*	59.87.481	Toothed belt	SPE/Spectra107/Spectra 160/Duoprint/ILX 10X	1
144	59.88.032	Toothed belt wheel	Spectra/SPE/SPX/Vita/Flexicode/ALP	2
145	59.88.033	Toothed belt wheel	Spectra/SPE/SPX/Vita/ILX	3
146*	59.88.225	Toothed belt	Spectra	1
147*	59.88.300	Toothed belt	Spectra/Vita/ILX 10X	1
148	67.48.035	Interface cover	Vita II/Compa II/Pica II/Duop/Vario III/Spectra II	1
149	67.81.003	Chassis base	Duoprint 107/Duoprint 160	1
150	67.81.010	GUSSET		1
151	67.81.015	COVER PLATE		1
152	67.81.022	SOLE PLATE BELOW		1
153	67.81.032	SOLE PLATE BELOW		1
154	67.81.050	SUPPORTING PLATE		2
155	67.81.055	COVER CPU		1
156	67.81.201	Base plate	Duoprint 160	1
157	67.81.205	Back panel	Duoprint 160	1
158	67.81.212	Cover, right	Duoprint 160	1
159	67.81.230	Tear-off edge	Duoprint 160/Spectra II 16X	1
160	67.81.235	FIXING ANGLE	DUOPRINT 160	1
161	67.81.240	COVER PLATE		1
162	67.87.035	Cross bar, right	SPE/Spectra107/Spectra 160/Duoprint	2
163	67.88.005	Cover, left	Spectra 10X/Spectra 16X/Spectra 216/Duoprint	1
164	67.88.017	Sole plate, above	Spectra 107/Spectra 160/Duoprint	2
165	67.88.030	Sole plate ribbon rewinder	Spectra/Spectra II/SPE/Vario/SPX/Vita	2
166	67.88.035	Sole plate ribbon unwinder	Spectra/SPE/SPX/Vita/ILX	2
167	67.88.065	Circuit plate	Spectra/SPE/SPX	2
168	67.88.080	Adjusting plate	Spectra/SPE/SPX	2

*Recommended spare part

90.81.300

DUOPRINT 160/12 THERMAL TRANSFER PRINTER KCE

Pos	Ident-No.	Description1	Description2	Quantity
169	67.88.090	Cover, right (part of window)	Spectra 107/108/106/162/216/Duoprint	1
170	67.88.095	Cover, right (base part)	Spectra 107/108/106/162/216/Duoprint	1
171	67.88.220	Front sheet	Spectra 160/Spectra 162/Duoprint 160	1
172	70.81.001	CPU cpl	Duoprint	1
173	70.81.010	Distributor plate printhead	Duoprint	1
174	70.81.400	Power electronics	Duoprint	1
175	71.81.005	Ribbon photcell cpl		1
176	71.81.010	Stepper motor feed cpl	Duoprint	1
177	71.81.015	Photocell printhead/ribbon/ribbon saving		4
178	71.81.030	Control unit cpl		1
179	71.81.050	Discharge-resistor	Duoprint	1
180	71.81.401	Stepper motor for ribbon saving		1
181	71.81.701	Stepper motor for transfer ribbon cpl	Duoprint	1
182*	71.83.018	Label photocell	transmission above+reflexion below	2
183	72.48.019	Toothed belt wheel cpl	Vita/ILX/Duoprint	2
184	72.81.007	Carrier plate cpl	Duoprint 107/Duoprint 160	1
185	72.81.017	Carrier plate behind cpl	Duoprint 107/Duoprint 160	1
186	72.81.019	Toothed belt wheel cpl	Duoprint	1
187	72.81.220	Label guiding cpl	Duoprint 160	1
188	72.87.010	Adjusting device cpl	SPE 107/SPE 160/Spectra 107/Spectra 160/Duoprint	4
189	72.87.012	Adjusting device cpl	SPE 107/SPE 160/Spectra 107/Spectra 160/Duoprint	4
190	72.87.205	Pressure shaft KCE cpl	SPE 160, right/SPECTRA 160/Duoprint 160	2
191*	72.88.034	Toothed belt wheel cpl	Spectra/SPE/SPX/Vita/ILX 10X	3
192*	72.88.048	Toothed belt wheel cpl	Spectra/SPE/Vario/SPX/Vita/Flexicode/ILX/ALP	2
193	72.88.070	Backfeed plate cpl	Spectra/SPE/DPM III/Vario/SPX/Vita/ILX/ALP	2
194*	72.88.201	Ribbon rewinder/unwinder roll	Spectra 162/160/SPX 162/Duoprint 160	4
195	72.88.210	Brush shaft cpl	Spectra 162/160/Duoprint 160	4
196	72.88.403	Washer cpl	Duoprint 160/LPM II 16X	1

*Recommended spare part

90.81.300

DUOPRINT 160/12 THERMAL TRANSFER PRINTER KCE

Pos	Ident-No.	Description1	Description2	Quantity
197	72.88.425	Sole plate ribbon saving cpl	Spectra/SPE/Duoprint	1
198	98.04.340	Slot screwdriver Wiha 5003.0x40		1

*Recommended spare part

90.81.310

DUOPRINT 160/12 THERMAL TRANSFER PRINTER KCE INCLUDING PA81

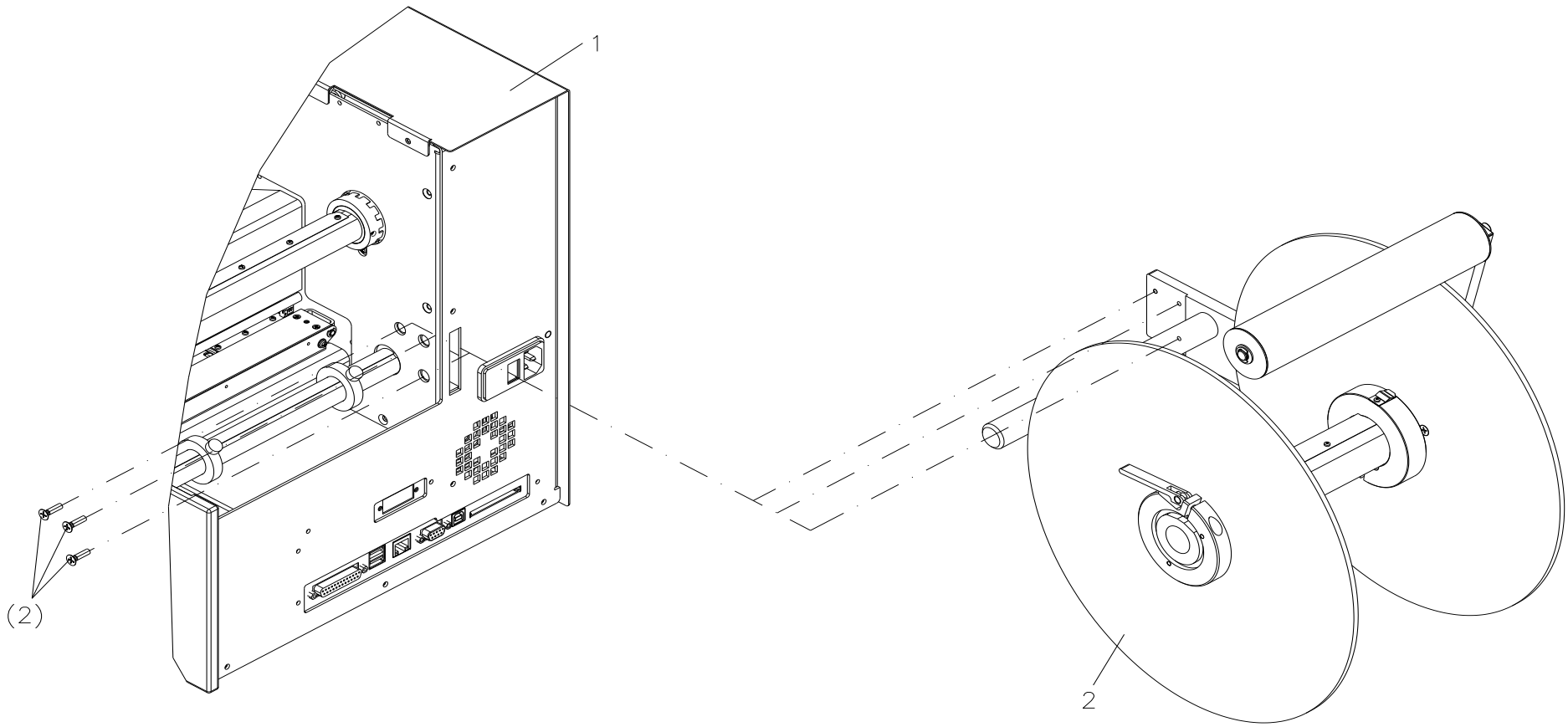

90.81.310

DUOPRINT 160/12 THERMAL TRANSFER PRINTER KCE
INCLUDING PA81

Pos	Ident-No.	Description1	Description2	Quantity
1	90.81.300	Duoprint 160/12 thermal transfer printer KCE		1
2	92.81.200	Unwinder PA 81	Duoprint 160	1

*Recommended spare part

90.88.890

LEPORELLO GUIDING
SPECTRA/SPECTRA II 10X, OPTION

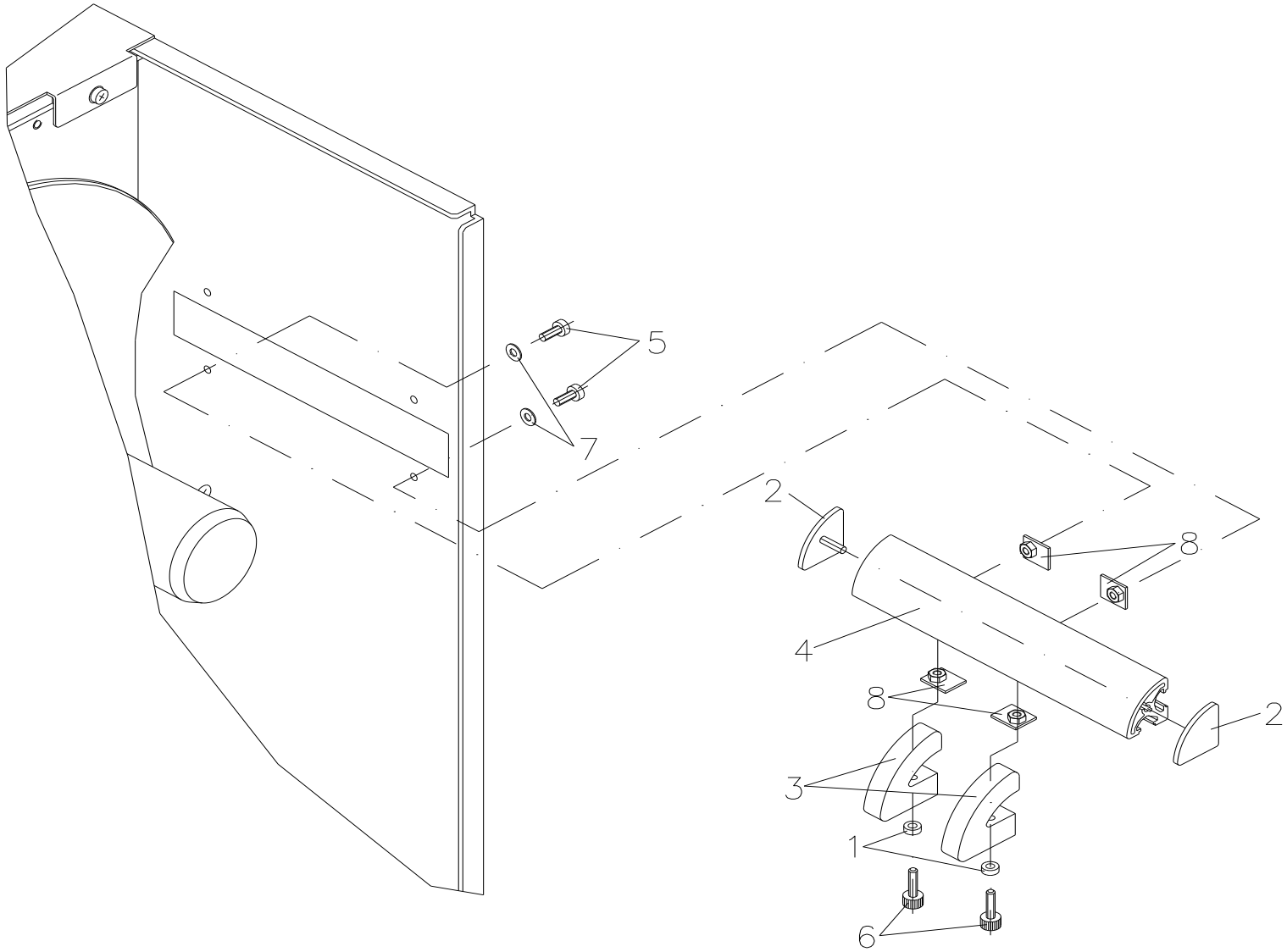

90.88.890

LEPORELLO GUIDING
SPECTRA/SPECTRA II 10X, OPTION

Pos	Ident-No.	Description1	Description2	Quantity
1	10.55.005	Spacer ring	Vario/Spectra	2
2	16.55.005	Cover	Vario/Spectra/SPE	2
3	16.55.060	Label guiding	Vario/Spectra	2
4	45.55.005	F profile 133 mm	Vario/Spectra	1
5	48.14.308	Pan screw M3x8		2
6*	48.16.005	Knurled screw M3x12		2
7	50.01.057	Lock washer 3.2		2
8	67.55.101	Dome nut	Vario/Spectra	4

*Recommended spare part

90.88.990

LEPORELLO GUIDING
SPECTRA/SPECTRA II 16X

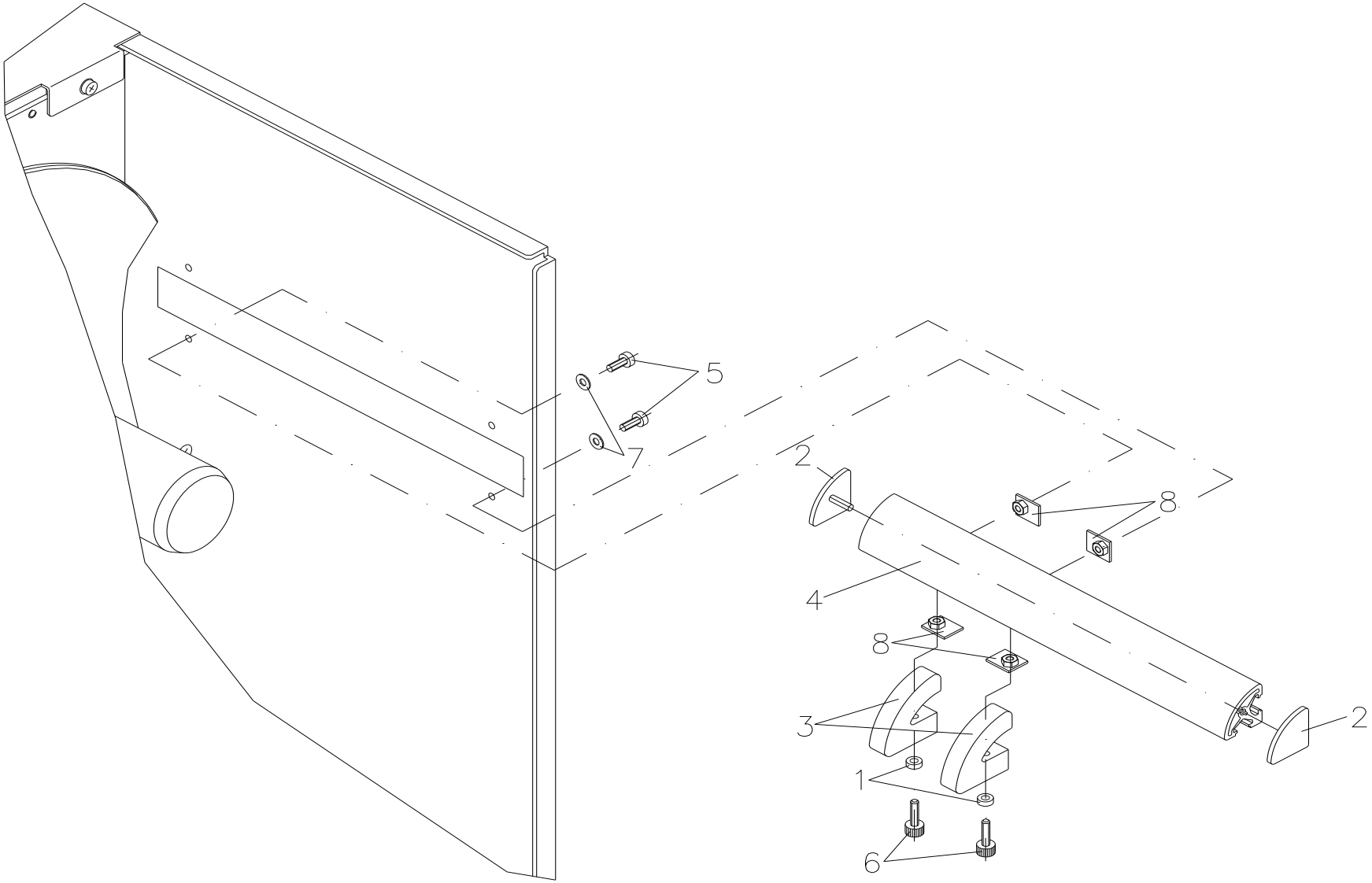

90.88.990

LEPORELLO GUIDING
SPECTRA/SPECTRA II 16X

Pos	Ident-No.	Description1	Description2	Quantity
1	10.55.005	Spacer ring	Vario/Spectra	2
2	16.55.005	Cover	Vario/Spectra/SPE	2
3	16.55.060	Label guiding	Vario/Spectra	2
4	45.88.903	F profile	Spectra 162	1
5	48.14.308	Pan screw M3x8		2
6*	48.16.005	Knurled screw M3x12		2
7	50.01.057	Lock washer 3.2		2
8	67.55.101	Dome nut	Vario/Spectra	4

*Recommended spare part

90.81.786

DISPENSER I/O
DUOPRINT, OPTION

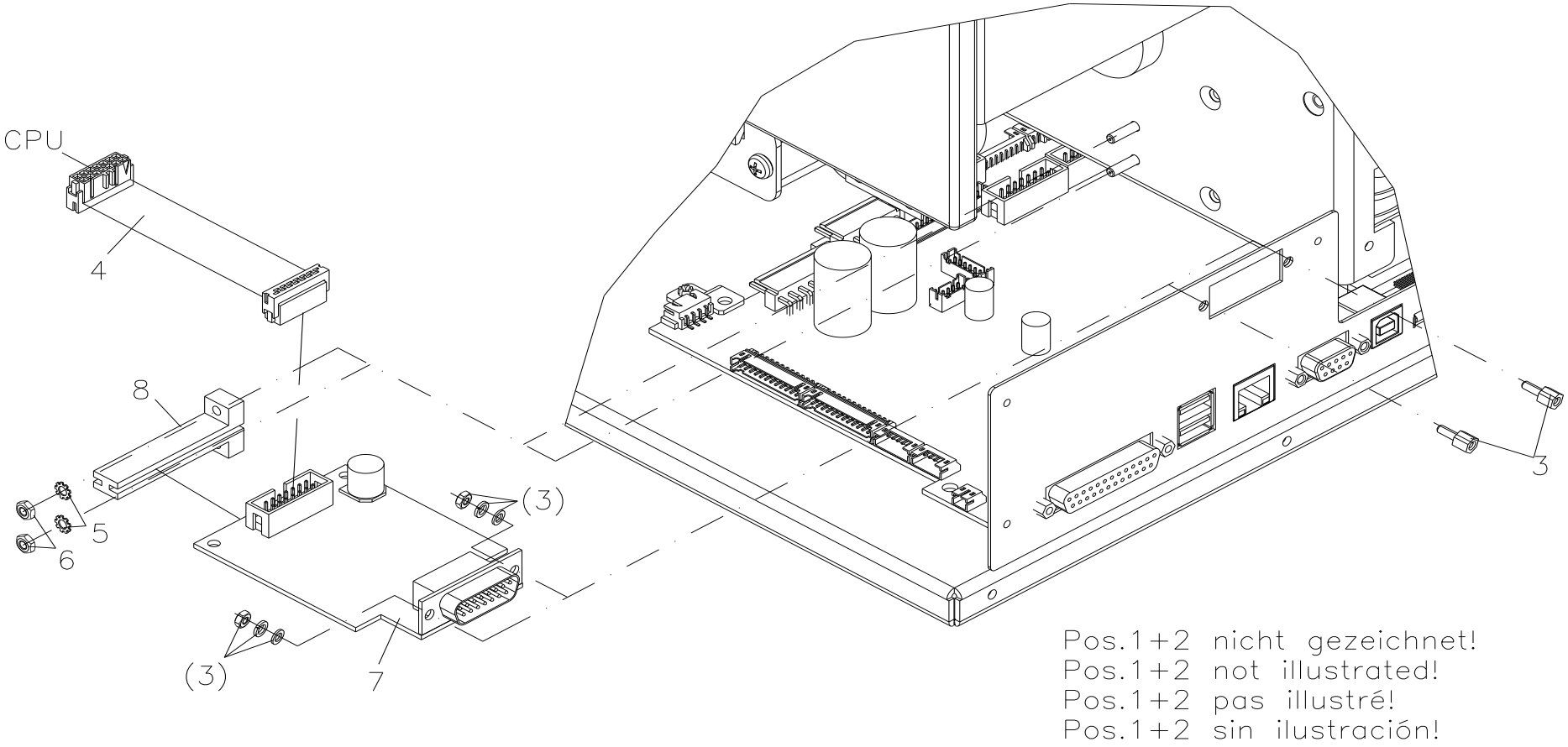

90.81.786

DISPENSER I/O
DUOPRINT, OPTION

Pos	Ident-No.	Description1	Description2	Quantity
1	25.04.016	Cover 15-pin		1
2	25.04.046	SUB-D 26-pin		1
3	25.04.100	SUB-D fixing set		1
4	28.48.040A	Connecting cable, WLAN-I/O CPU	Vita II/Compa II/ILX/SPE II	1
5	41.02.001	FAN SHAPED WASHER M3		2
6	47.04.001	Hexagon nut M3		2
7*	70.39.005	I/O plate cpl		1
8	72.48.501	PCB guiding assembled		1

*Recommended spare part

92.81.100

UNWINDER PA 80
DUOPRINT 107

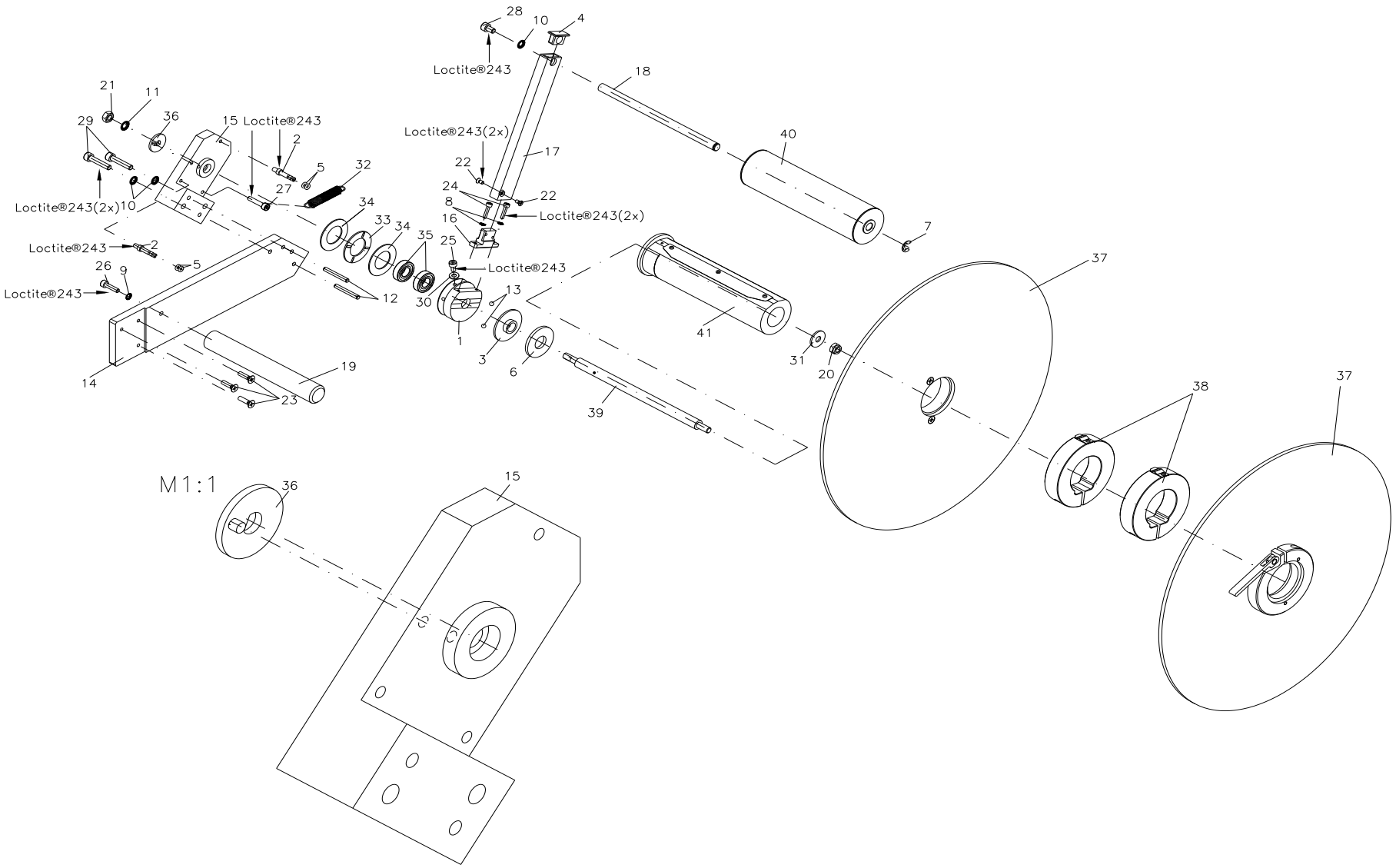

92.81.100

UNWINDER PA 80
DUOPRINT 107

Pos	Ident-No.	Description1	Description2	Quantity
1	10.81.705	Bearing bush	PA 80/81/74/77/76/79	1
2	12.81.705	Pin	PA80/PA81/PA74/PA76/PA77/PA79	2
3	14.81.705	Bushing	PA 80/81/74/76/77/79	1
4	16.81.715	Bearing	PA 80/81/74/76/77/79	1
5*	18.01.007	Ring 3.1x1.6	Compa/Vita/PA74/PA77/PA80/PA81	4
6*	18.81.705	Brake washer	PA80/PA81/PA74/PA77/PA76/PA79	1
7	40.01.006	Shaft protection 6 mm		1
8	41.03.003V	Lock washer M3 stainless		2
9	41.03.004V	Lock washer M4 stainless		1
10	41.03.005V	Lock washer M5 stainless		3
11	41.03.006V	Lock washer M6 stainless		1
12	43.02.430	Cylinder pin 4 x 30 mm		2
13*	43.03.004	Steel ball 4 mm		2
14	45.81.701	BRACKET		1
15	45.81.705	BEARING ANGLE		1
16	45.81.710	Whip	PA80/PA81/PA74/PA76/PA77/PA79	1
17	45.81.715	Profile tube	PA80/PA81/PA74/PA76/PA77/PA79	1
18	46.81.765	Bearing shaft	PA80/PA72A/PA75A	1
19	46.81.910	Return pulley	PA80/Spectra II 10X	1
20	47.03.006V	Hexagon nut M6 stainless		1
21	47.07.001V	Hexagon nut M6 stainless		1
22	48.15.003V	Countersunk screw M3x6 stainless		2
23	48.15.004V	Countersunk screw M4x16 stainless		3
24	48.16.310V	Socket cap screw M3x10 stainless		2
25	48.16.408V	Socket cap screw M4x8 stainless		1
26	48.16.416V	Socket cap screw M4x16 stainless		1
27	48.16.420V	Socket cap screw M4x20 stainless		1
28	48.16.508V	Socket cap screw M5x8 stainless		1

*Recommended spare part

92.81.100

UNWINDER PA 80
DUOPRINT 107

Pos	Ident-No.	Description1	Description2	Quantity
29	48.16.526V	Socket cap screw M5x25 stainless		2
30	50.01.065V	Lock washer 4.3 stainless		1
31	50.01.076V	LOCK WASHER		1
32	52.81.005	Tension spring		1
33*	57.00.235	Needle ring		1
34*	57.00.2351	Washer bearing		2
35*	57.01.027	Grooved ball bearing		2
36	72.81.705	Adjusting washer cpl	PA80/PA81/PA74/PA77/PA76/PA79	1
37	72.81.735	Washer	PA80/PA81/PA74/PA77/PA76/PA79	2
38	72.81.745	Additional toroidal 75 mm	PA80/PA81/PA74/PA77/PA76/PA79	2
39	72.81.760	Bearing shaft cpl	PA80	1
40	72.81.763	Roller cpl	PA80/PA72A/PA75A	1
41	72.81.765	Unwinding roller cpl	PA80	1

*Recommended spare part

92.81.200

UNWINDER PA 81
DUOPRINT 160

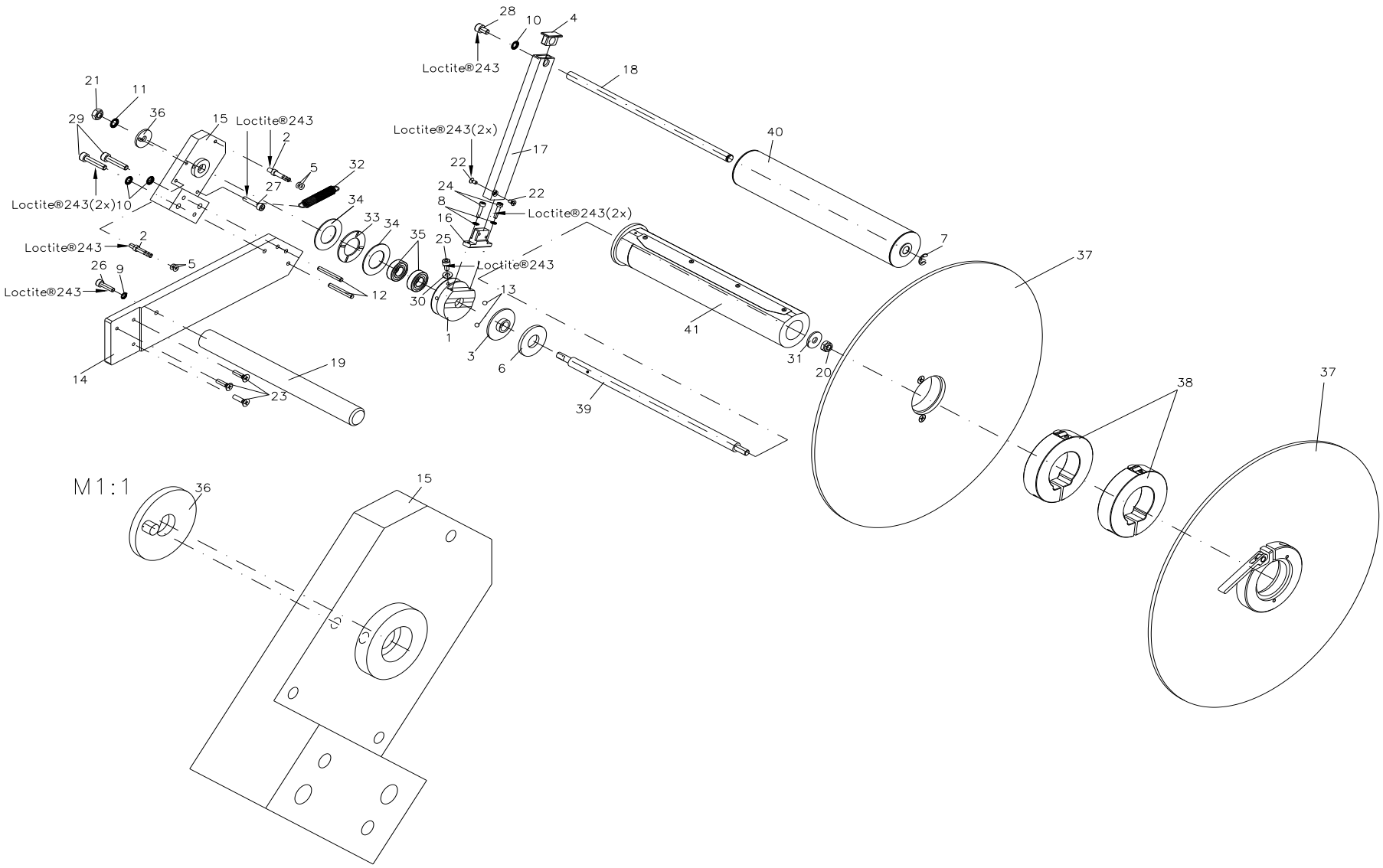

92.81.200

UNWINDER PA 81
DUOPRINT 160

Pos	Ident-No.	Description1	Description2	Quantity
1	10.81.705	Bearing bush	PA 80/81/74/77/76/79	1
2	12.81.705	Pin	PA80/PA81/PA74/PA76/PA77/PA79	2
3	14.81.705	Bushing	PA 80/81/74/76/77/79	1
4	16.81.715	Bearing	PA 80/81/74/76/77/79	1
5*	18.01.007	Ring 3.1x1.6	Compa/Vita/PA74/PA77/PA80/PA81	4
6*	18.81.705	Brake washer	PA80/PA81/PA74/PA77/PA76/PA79	1
7	40.01.006	Shaft protection 6 mm		1
8	41.03.003V	Lock washer M3 stainless		2
9	41.03.004V	Lock washer M4 stainless		1
10	41.03.005V	Lock washer M5 stainless		3
11	41.03.006V	Lock washer M6 stainless		1
12	43.02.430	Cylinder pin 4 x 30 mm		2
13*	43.03.004	Steel ball 4 mm		2
14	45.81.701	BRACKET		1
15	45.81.705	BEARING ANGLE		1
16	45.81.710	Whip	PA80/PA81/PA74/PA76/PA77/PA79	1
17	45.81.715	Profile tube	PA80/PA81/PA74/PA76/PA77/PA79	1
18	46.81.785	Bearing shaft	PA81	1
19	46.81.920	Return pulley	PA81/Spectra II 162	1
20	47.03.006V	Hexagon nut M6 stainless		1
21	47.07.001V	Hexagon nut M6 stainless		1
22	48.15.003V	Countersunk screw M3x6 stainless		2
23	48.15.004V	Countersunk screw M4x16 stainless		3
24	48.16.310V	Socket cap screw M3x10 stainless		2
25	48.16.408V	Socket cap screw M4x8 stainless		1
26	48.16.416V	Socket cap screw M4x16 stainless		1
27	48.16.420V	Socket cap screw M4x20 stainless		1
28	48.16.508V	Socket cap screw M5x8 stainless		1

*Recommended spare part

92.81.200

UNWINDER PA 81
DUOPRINT 160

Pos	Ident-No.	Description1	Description2	Quantity
29	48.16.526V	Socket cap screw M5x25 stainless		2
30	50.01.065V	Lock washer 4.3 stainless		1
31	50.01.076V	LOCK WASHER		1
32	52.81.005	Tension spring		1
33*	57.00.235	Needle ring		1
34*	57.00.2351	Washer bearing		2
35*	57.01.027	Grooved ball bearing		2
36	72.81.705	Adjusting washer cpl	PA80/PA81/PA74/PA77/PA76/PA79	1
37	72.81.735	Washer	PA80/PA81/PA74/PA77/PA76/PA79	2
38	72.81.745	Additional toroidal 75 mm	PA80/PA81/PA74/PA77/PA76/PA79	2
39	72.81.780	Bearing shaft cpl	PA81	1
40	72.81.783	Roller cpl	PA81	1
41	72.81.785	Label unwinding roller cpl	PA81	1

*Recommended spare part